齐陆工贸
QILU

MINI EXCAVATOR

Product Manual

QL-12ECO

EASY BIZ

Safety

General Precautions

You are responsible for following the safety regulations and laws of relevant departments, and operating, inspecting and maintaining the machine in accordance with the manufacturer's requirements.

In fact, all accidents are sometimes caused by failure to comply with basic safety regulations and precautions.

Most accidents can be avoided by identifying potentially dangerous situations in advance.

Please read and understand all safety information describing how to prevent accidents. Do not operate the machine until you are sure that you understand how to operate, inspect, and maintain the machine correctly.

Comply with all safety regulations

The machine must be operated, inspected and maintained by trained and qualified personnel.

All rules, regulations, precautions and safety measures must be understood and observed when operating, inspecting and maintaining the machine.

Do not operate, inspect and maintain the machine under the adverse effects of alcohol, Drugs, drugs, fatigue, or lack of sleep.

Discover machine abnormality

During the operation, inspection and maintenance of the machine, if any abnormality (noise, vibration, peculiar smell, oil leakage, false alarm, etc.) is found, the sales or service agent should be notified immediately and appropriate measures should be taken. Do not operate the machine until the abnormality is eliminated.

Operating temperature range

In order to maintain the performance of the machine and avoid premature wear, please observe the following operating conditions.

If the outdoor temperature exceeds +45°C or is lower than -15°C, do

not operate the machine.

If the outdoor temperature exceeds +45 ° C when operating, the engine may overheat, resulting in poor engine oil performance. Also, the hydraulic fluid can get very hot, causing damage to hydraulic equipment.

Rubber parts such as gaskets may harden if operated at outdoor temperatures below -15 ° C, leading to premature wear or damage to the machine.

If you need to operate the machine outside the above outdoor temperature range, please consult your sales or service agent.

Wear appropriate clothing and protective gear

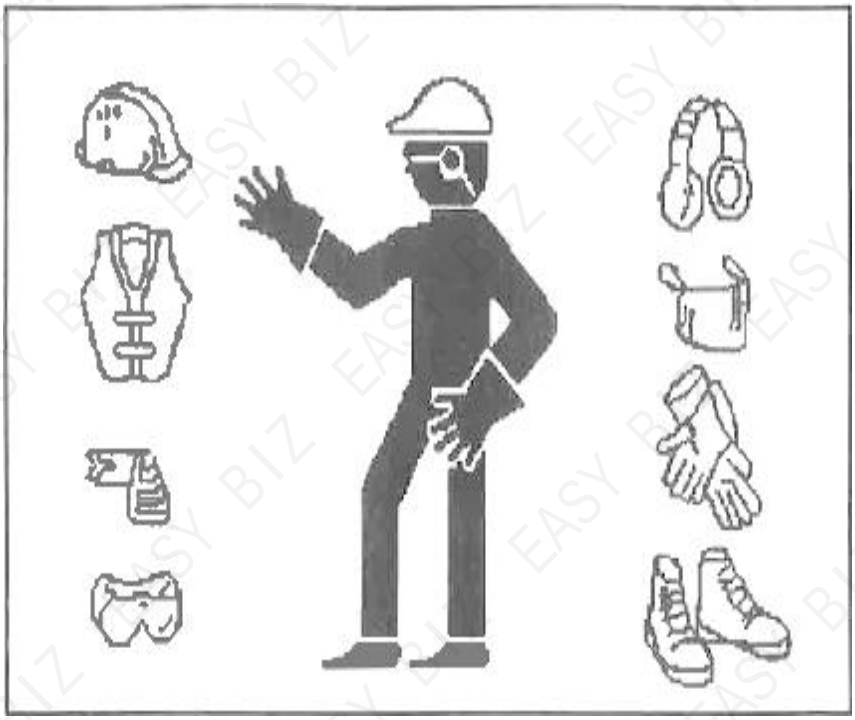

Do not wear loose clothing or accessories that may hang control rods or moving parts.

Do not wear inflammable clothes with oil or oil contamination.

Wear safety shoes, safety helmet, safety glasses, filter mask, thick gloves, ear muffs and other protective equipment according to the requirements of the working environment. Appropriate protective equipment, such as safety glasses and filter masks, should be worn when using grinders, crushing hammers or compressed air, as flying metal chips or other objects can cause serious injury.

When operating the machine, use hearing protection. Exposing to high noise for a long time can damage hearing or even completely lose it.

Install fire extinguishers and first aid kits

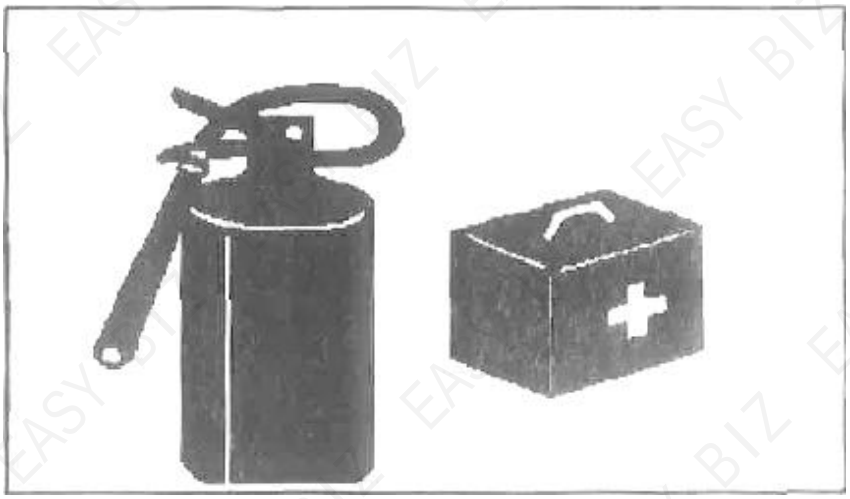

Be prepared for fire and accident.

Install fire extinguishers and first aid kits and learn how to use them.

Learn how to extinguish fires and deal with accidents.

Know how to contact emergency assistance and make a list of emergency contacts.

Do not remove safety devices

Please make sure that all protective fences are installed in place and firmly. Before operating the machine, repair or replace damaged parts.

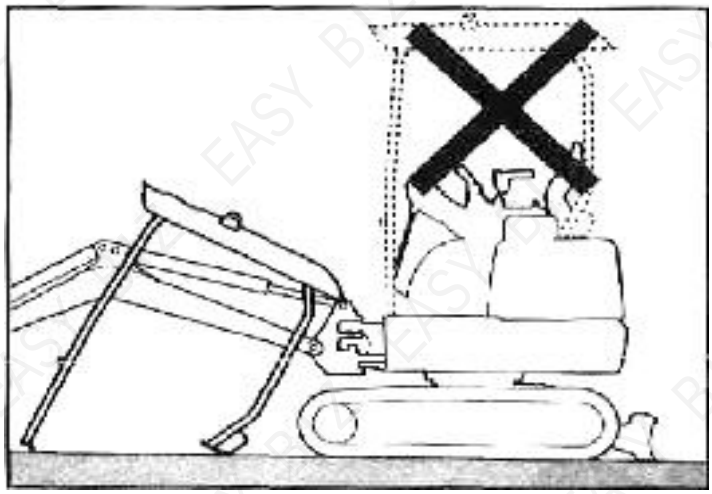

Except for maintenance, never remove any safety devices. Use all safety devices to always maintain good working conditions.

Equipped with signalmen and signal flag bearers.

Learn how to use the gestures required for a specific assignment and identify the person responsible for the gesture.

All personnel must fully understand all gestures.

The operator must only respond to the gesture of the designated person, but must obey any person's stop gesture at any time.

When the signalman sends a signal, he must stand in a clearly visible place.

Points to note when standing up or leaving the driver's seat

When standing up from the driver’s seat, lower the working device to the ground and stop the engine. If you accidentally touch any control handle, it will move the machine and cause serious injury or death.

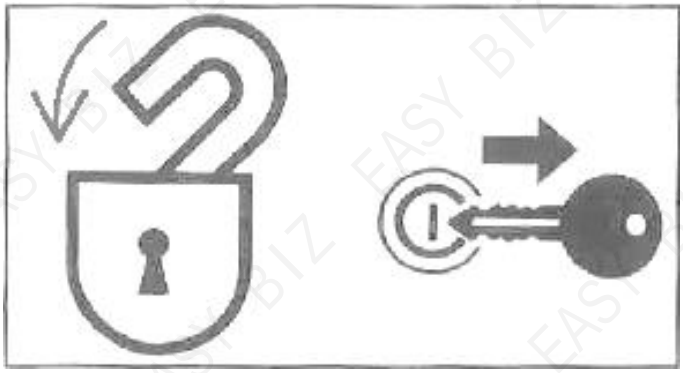

Please note that the bulldozer, boom swing and auxiliary hydraulic controls, do not touch these controls.

Before leaving the cab seat, lower the working device to the ground and turn off the engine.

At the same time, please be sure to pull out the key, and take the key with you, and then store in the designated place.

Avoid fire and explosion hazards

Keep fuel, lubricating oil, grease and antifreeze away from fire sources. Fuel is particularly flammable and very dangerous.

When handling these combustibles, stay away from lit cigarettes, matches, lighters, and other flames or sources of ignition.

When handling fuel oil or working on the fuel system, do not smoke or present open flames.

When replenishing fuel or lubricating oil, do not leave the job site.

When the engine is running or has not yet cooled down, do not remove the fuel tank cap or refuel. And do not splash fuel on the hot surface of the machine or electronic system components.

Clean up the spilled fuel or lubricating oil immediately.

Check for fuel and lubricating oil leakage. Please remove the leak and clean the machine before operation.

When polishing or welding, please move flammable materials to a safe place.

Do not cut or weld on pipes or pipes that contain flammable liquids. Before cutting or welding, please clean it thoroughly with a non-flammable solvent.

Remove all rubbish or debris from the machine. Make sure that no oily rags or other flammable materials remain on the machine.

Dispose of various solvents or dry chemicals (foam-type fire extinguishers) in accordance with the procedures on the manufacturer's containers. Carry out in a well-ventilated place.

Never use fuel for cleaning purposes. Always use non-flammable solvents.

Keep all flammable liquids and materials in a safe and well-ventilated place.

A short circuit in the electronic system may cause a fire. Check every day whether the wire connection is loose or damaged. Retighten loose connectors and cable buckles. Repair or replace damaged wires.

Fire caused by pipeline:

Ensure hose and pipe clips, protection devices and cushions are securely secured. If any loose, hoses or pipes may vibrate or come into contact with other parts during operation and get damaged. This can cause high pressure oil to eject, causing a fire or injury.

Exhaust from the engine is toxic

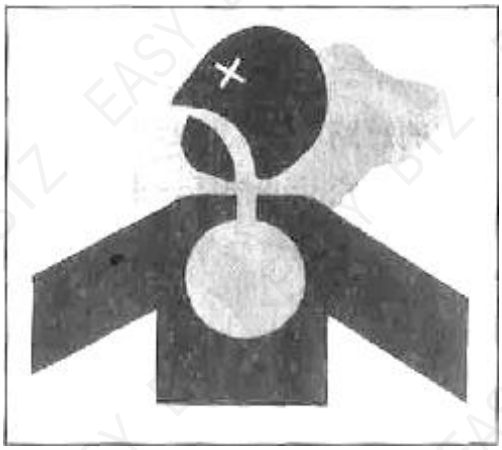

Do not operate the engine in a closed place with poor ventilation.

If natural ventilation is not possible, ventilation fans, fans, extended exhaust pipes or other ventilation devices should be installed.

Handling of asbestos dust

Inhalation of asbestos dust may cause lung cancer. When handling materials that may contain asbestos, take the following safety measures:

Never use compressed air for cleaning.

Avoid polishing or sanding parts that contain asbestos.

When cleaning, please use vacuum equipment equipped with a

high-efficiency particulate air filter.

If there is no other way to control dust, please wear the specified respirator. When working indoors, please install a ventilation system equipped with a polymer filter.

During operation, do not allow unauthorized personnel to enter the work area.

Please strictly abide by the rules and environmental standards applicable to the work area.

Be careful to avoid squeezing

Do not place hands, feet or other body parts between the upper and lower workshops or crawlers, between the body and the working device, or between the oil cylinder and the moving part. When the machine moves, the size of these gaps will change, which may cause serious injury or death.

Use optional products

Please consult QiLu before installing options. Depending on the type of accessory or their combination, the accessory may come into contact with the cab or other parts of the machine. Before use, please make sure that the installed option is not in contact with other parts.

Do not use accessories that have not been approved by Qilu. Doing so may endanger safety or adversely affect the operation or service life of the machine.

Shandong Qilu Industry Co., Ltd. is not responsible for any injury, accident or product damage caused by the use of unauthorized

accessories.

Please do not alter the machine

Unauthorized modifications to the machine can cause injury or death. Do not make unauthorized modifications to any part of the machine.

Safety signs (identification)

In order to ensure the safety of operators and workers around the work area, the following safety signs (marks) should be placed on certain parts of the machine. Carry this manual and walk around the machine to check the content and placement of these safety signs. Review these signs and operating instructions in this manual with your machine driver.

Safety signs should be kept clean, clear and easy to identify. If any safety label falls off or becomes damaged and becomes illegible, replace it with a new label. When ordering a new label from a Qilu service agent, please provide your product serial number.

When the part/body posted by the safety sign has been replaced, a new mark should be posted on the new part/body.

Precautions for preparation

Understand the work area

Before starting operation, you should understand the operating area to ensure safety.

Check the topography and ground conditions of the work area. When working indoors, check the building structure and take safety measures when necessary.

Be sure to avoid hazards and obstacles such as water ditches, underground pipelines, trees, cliffs, overhead power lines, or areas with falling rocks or landslides.

Check the location of buried gas pipes, water pipes and power cables with the administrator. If necessary, consult with the administrator and determine the specific security measures that must be taken to ensure safety.

When working on the road, the safety of pedestrians and vehicles must be considered.

Use signalmen or signals. Isolate the work area, and unauthorized personnel are not allowed to enter.

When working in the water or driving through a shallow stream, check the water depth, the firmness of the ground and the speed of the water in advance.

Check the strength of the bridge

When walking on a bridge or structure, check the allowable load. If the strength is insufficient, the bridge or structure should be strengthened.

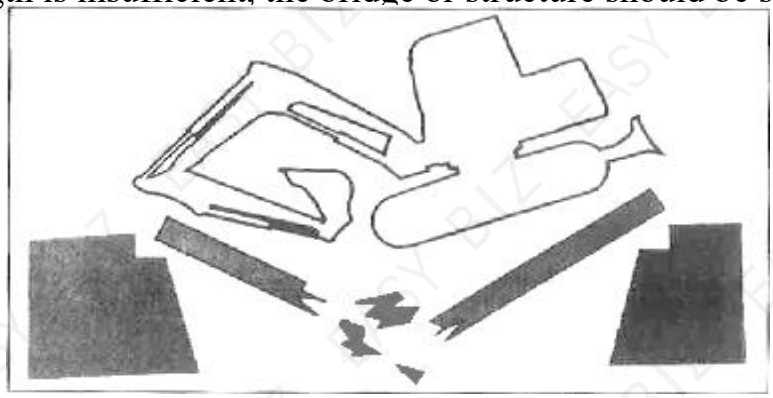

Always keep the machine clean

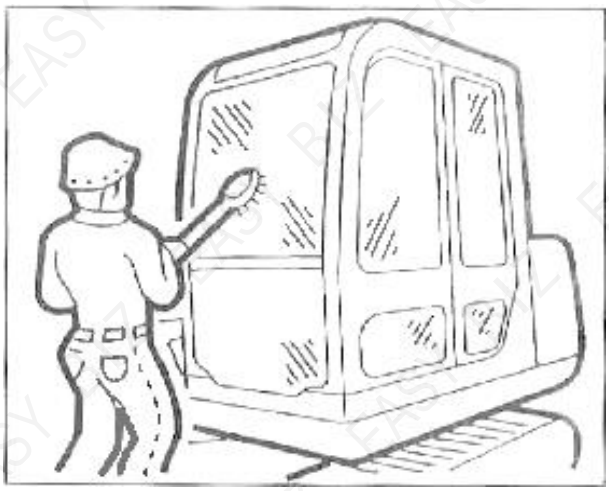

Remove lubricating oil, grease, dirt, snow or ice to prevent accidents due to skidding.

Remove all loose objects and unnecessary devices in the machine.

Remove dust, lubricating oil or grease from engine parts to prevent fire.

Clean around the operator's seat and remove any unnecessary objects from the machine.

Daily inspection and maintenance

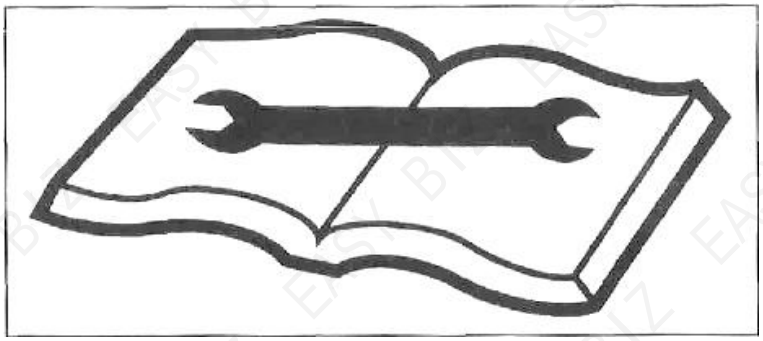

Failure to identify any abnormality or damage to the repair machine could cause an accident.

Before operation, please carry out the designated inspection and repair it immediately if necessary.

In case of accident and failure of operation or engine failure, please immediately stop the machine according to the shutdown procedure, and firmly park the machine until the fault is repaired.

Precautions in the driver's cabin

Please remove dirt and grease from the sole of your shoes before entering the driver's cab. Operating the machine pedal under the condition that the soles adhere to dirt and grease will cause accidents due to skidding.

Do not place parts or tools around the driver's seat.

Do not place any plastic bottles or install any suction cups in the cab. The plastic bottle or suction cup acts as a lens and may cause a fire.

Safety measures when starting

When getting on/off the machine, support your weight in a three-point safe posture.

Do not jump on or off the machine. Do not try to get up or down from the moving machine.

When going up and down the cab, please first fully open the door to the locked position and check and confirm that the door cannot be moved (for the machine with the cab).

Climb up or down the footrest facing the machine and hold the handrail, supporting your weight in a three-point safety posture (hands and feet).

Never use the lever as an armrest.

Before starting the machine, ask any unauthorized person to leave the area

The machine can be started only after checking the following items to make sure that it can be started safely.

Walk around the machine and warn the maintenance staff and those walking near the machine. After confirming that there are no people around the machine, start the machine.

Check whether there are warning signs of "do not operate" or similar signs on the driver's cab, control switch or start switch. If so, do not start the engine or touch any joysticks.

Honk the horn to warn people around the machine.

Sit in the driver’s seat and start the engine

Adjust the seat until it is firm and locked.

Fasten your seatbelt.

Check whether the parking device is turned on and whether all control levers and pedals are in the neutral position.

Make sure no one is near the machine.

The machine can only be started and operated from the driver's seat.

Never try to start the engine by short-circuiting the starting device.

Start with jumper cables

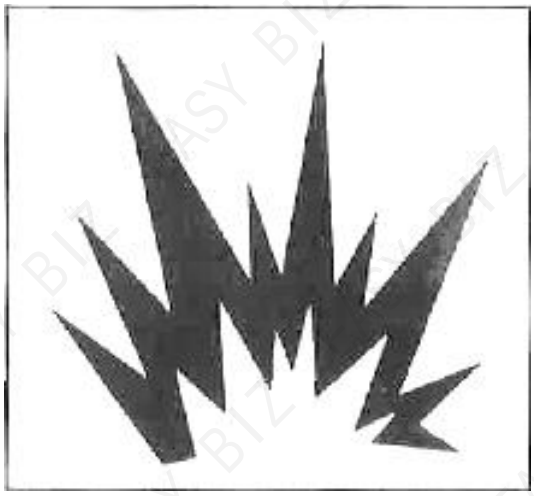

Starting with jumper cables can only be done in the recommended way. Improper use of jumper cables may cause battery explosion or unexpected machine actions.

After starting the engine

After starting the engine, perform the following operations and inspections where there are no people or obstacles. If any failure is found, shut down according to the procedure and report the failure.

Preheat the engine and hydraulic oil.

Check whether each instrument and alarm device are working properly.

Check for noise.

Test the engine speed control.

Operate each control tool to ensure that they are working properly.

Used in cold climates

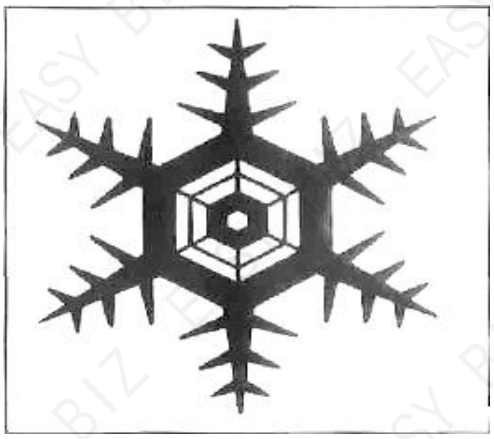

Watch out for frozen ground, pedals and handles, which are slippery.

In severe cold weather, do not touch any metal parts of the machine with bare hands.

The skin can freeze to the metal and cause serious injury.

Do not use ether or starting fluid on the engine. Starting fluid can cause an explosion and serious injury or death.

The engine and hydraulic oil should be preheated. If the lever is operated without preheating, the machine will not react or move quickly or properly, causing an accident.

Safety signs

1. Working device operation indication

This logo is located on the inside of the console.

Check whether the machine control mode is consistent with the label. If they are different, change the label to match the machine control mode before operating the machine.

Failure to follow this operation may result in personal injury or death.

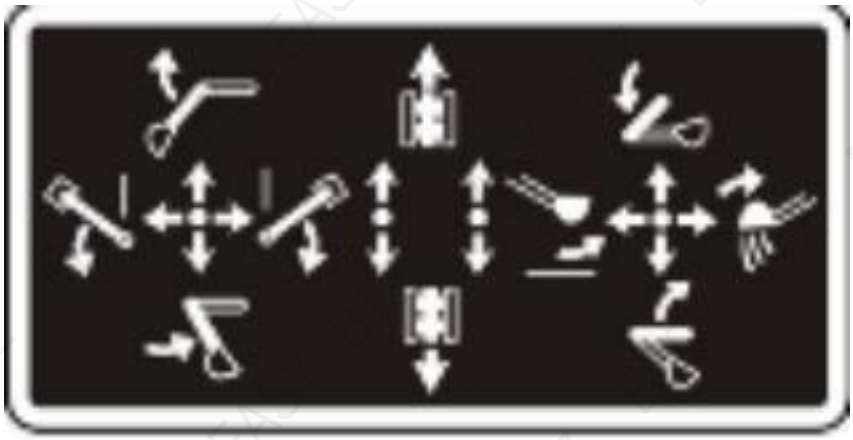

2. Adjust the track tensioning matters needing attention

This logo is located on both sides of the belly belt beam.

3.Pay attention to warning signs such as high-voltage line, read the manual, oil circuit lock, height and so on.

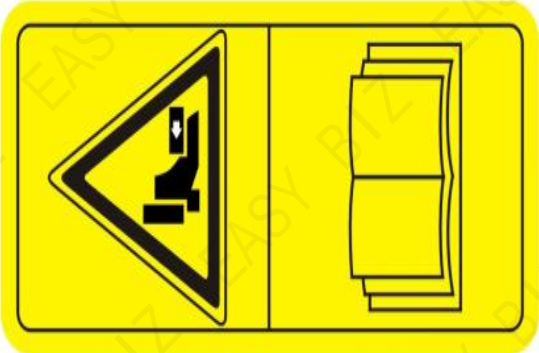

4.Stay away from the sign of turning area

This logo is located on the rear counterweight.
No standing in the turning area of the machine.
Do not damage or remove the logo from the machine.

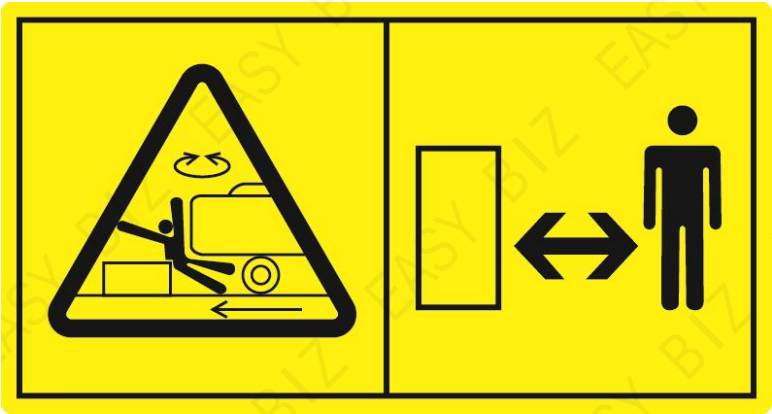

5.Fuel mark

This logo is located on the front of the seat cover.

Turn off the engine when filling fuel, and keep fuel filling away from all open flames.

6.Precautions for fuel

7. Precautions for battery use

This logo is located on the battery

8. It is strictly forbidden to stand in the working area

This logo is located on both sides of the boom

9. Keep away from the excavation area

This logo is located on both sides of the bucket rod.

10.The operation of the bulldozing shovel

This logo is on the right side of the operating platform.

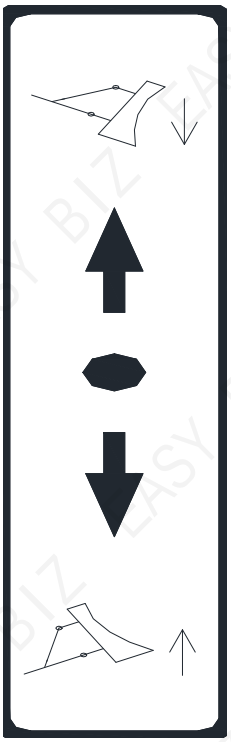

11. Hydraulic oil mark

This logo is located on the right side of the seat cover.

12.Battery maintenance warning label

This logo is located on the battery.

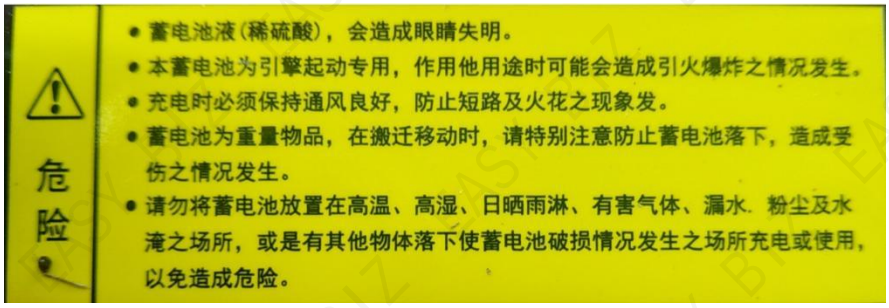

13.Engine muffler logo

Do not touch the exhaust pipe to prevent burns.

14.Electric shock hazard identification

This logo is located on the front of the seat cover.

15.Anti-skid warning signs

This logo is located on the front of the seat cover.

16.Please stay away from dangerous areas

Precautions during operation

Ensure good line of sight

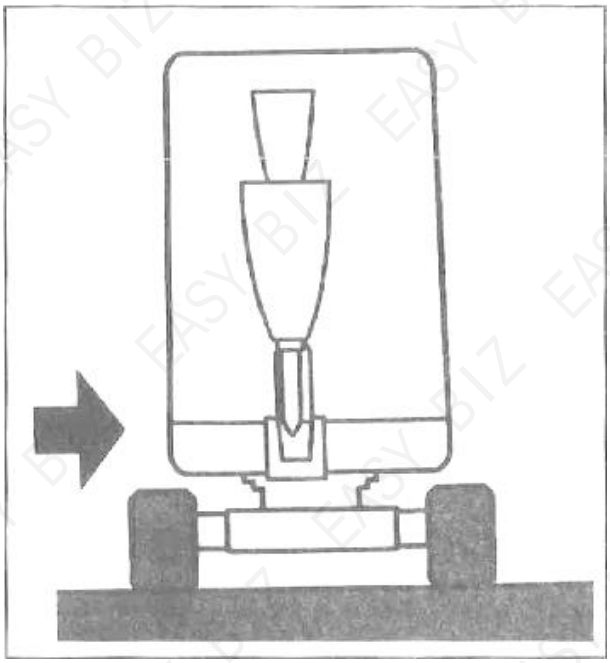

When working in a dark place, turn on the working lights and headlights of the machine, and install additional lighting when necessary.

When the line of sight is poor due to bad weather (fog, snow, rain or haze), stop operating the machine until the line of sight improves.

Do not carry people on the machine

When the machine is walking or operating, no one is allowed to ride on any part of the machine at any time.

E[illegible]er [illegible]ble

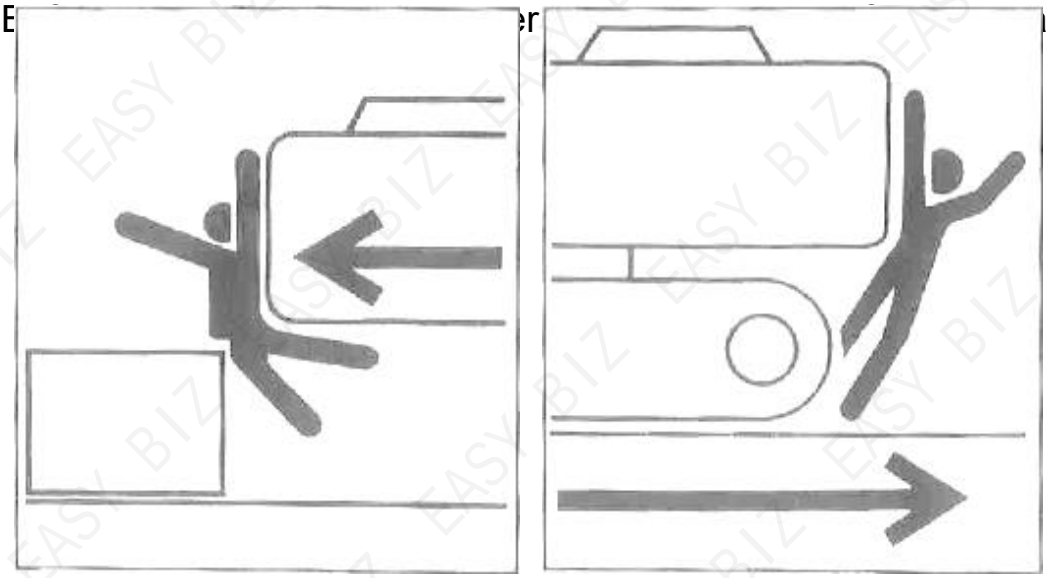

Confirm the performance limit of the machine.

Ask the signalman for help in narrow areas or obstructed vision.

Never allow anyone to enter the turning radius and path of the machine.

Honk your horn to express your intention to start moving.

There is a blind spot for viewing angle behind the machine. Before walking backwards, please check the safety behind and make sure there is no one behind.

Before walking, check the position of the lower frame (caterpillar).

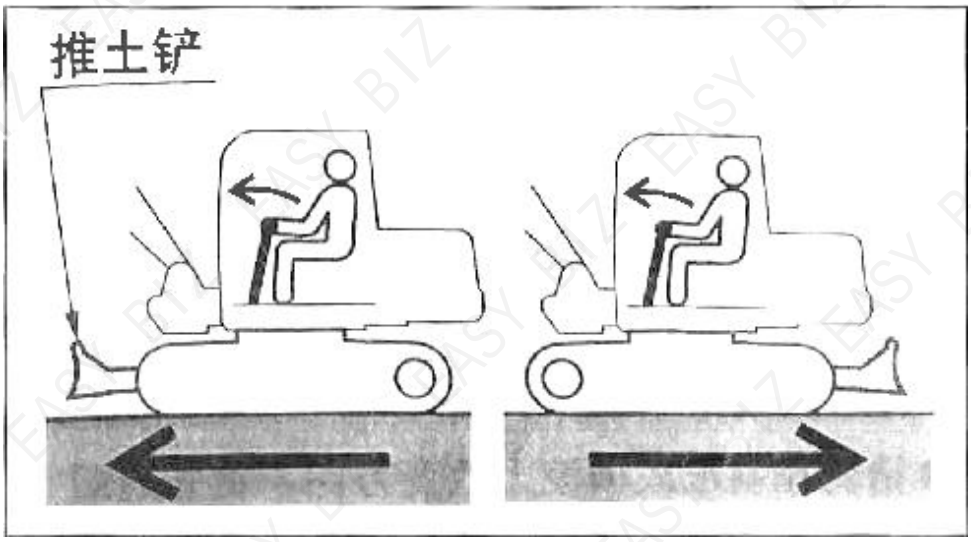

Before operating the walking joystick or pedal, make sure that the bulldozer is in front of the driver's seat. Remember, when the bulldozer is behind the driver's seat, the operating direction of the walking joystick

or pedal must be the opposite of when the bulldozer is in front of the driver's seat.

Safe to walk

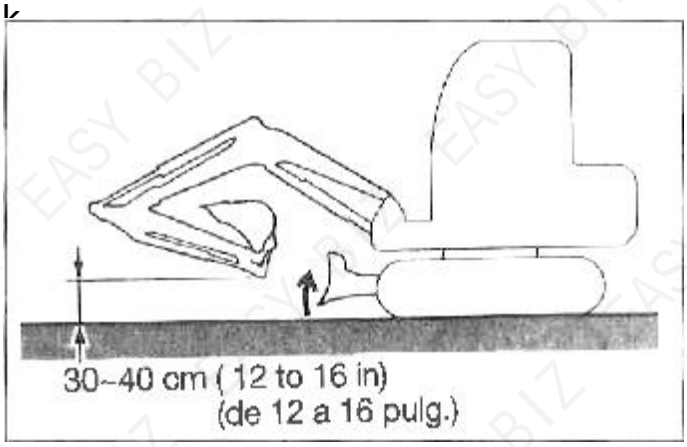

When walking, the bulldozer is in the rising state. Put away the bucket operating device as shown in the figure above, and lift the bucket to 30cm to 40cm above the ground.

Do not turn around when walking. If you must operate the bucket operating device while walking, the speed should be slow enough so that you can fully control it at all times.

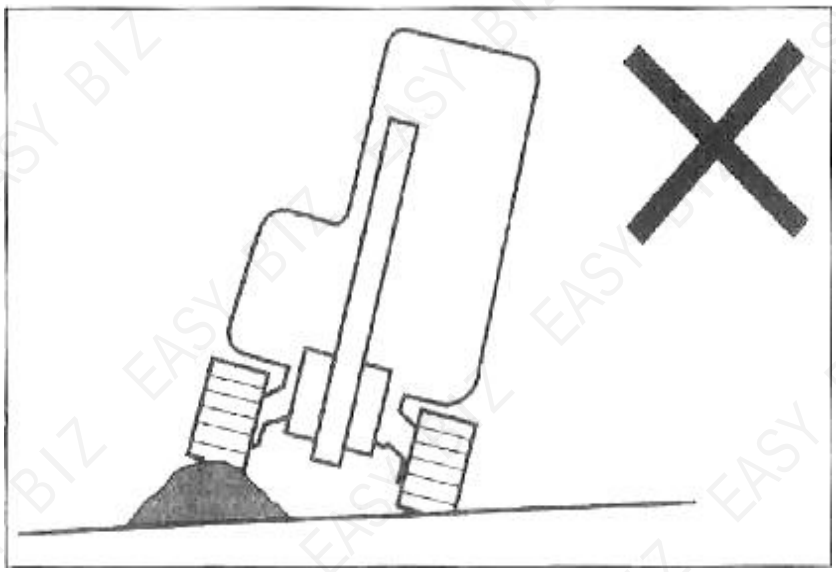

Try to avoid crossing obstacles. If you must do this, keep the bucket working device close to the ground and walk slowly. Do not go over obstacles that can tilt the machine at an angle of 10° or more.

On uneven roads, keep walking at a low speed and avoid sudden starts, stops or changes of direction. Otherwise, the working device may come into contact with the ground, causing the machine to lose its

balance or be damaged or destroy the structure in the surrounding area.

Precautions for walking on slopes

When walking on a slope, be careful not to overturn or slide the machine.

Do not walk on steep slopes where the machine cannot maintain its stability (maximum slope: 30°, lateral inclination: 10°). Please note that, in fact, depending on the working conditions, the stability of the machine will be lower than the above value .

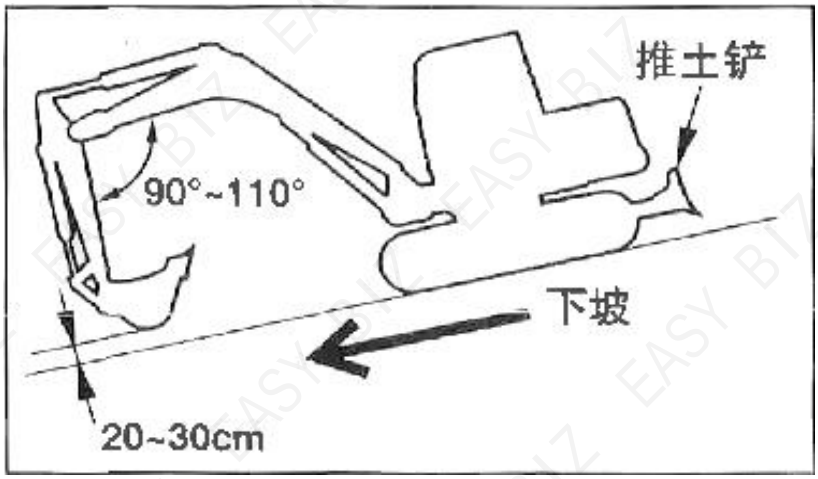

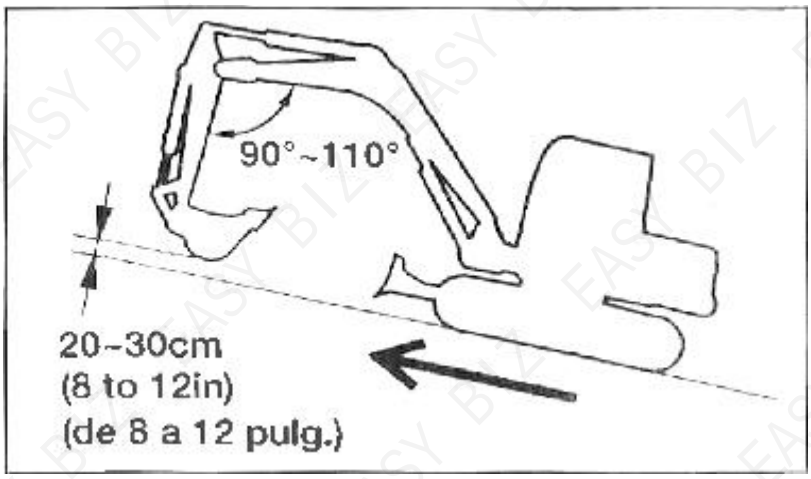

When going uphill, keep the driver's seat facing the hillside. When going downhill, keep the driver's seat facing downhill. In both cases, you must pay attention to the ground in front of the machine when walking.

When walking on a slope, lower the bucket 20 cm to 30 cm above the ground. When climbing a steep slope, extend the bucket operating device to the front. In an emergency, lower the bucket to the ground and turn off the machine.

When walking on slopes or ramps, drive slowly at low speeds. When

going down a slope, reduce the engine speed.

Do not reverse downhill

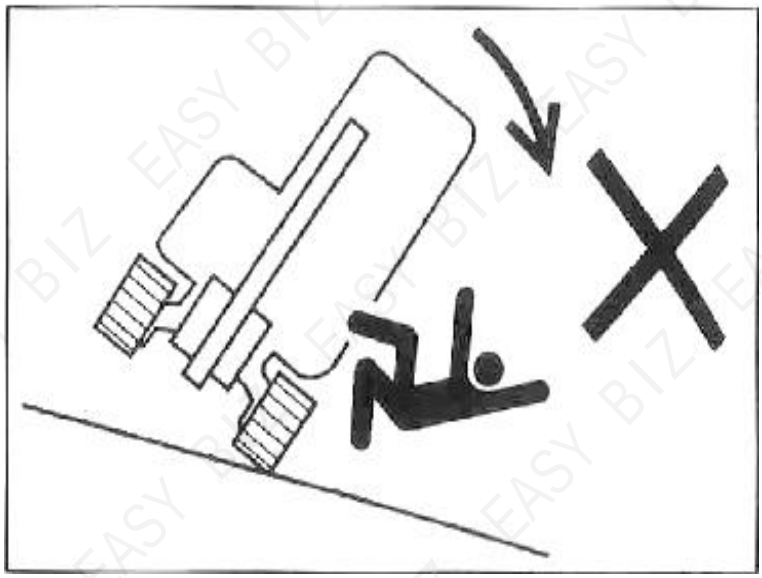

Do not change direction on slopes or cross slopes. First return to the flat surface, then choose another path.

When walking on a gentle slope covered with grass or dead leaves, or when walking on wet metal plates or frozen ground, the machine may slip. Make sure that the machine does not stop laterally on a slope.

If the machine stalls on a slope, return the control levers to the neutral position, and then restart the engine.

Be extra careful when operating the machine on snow or ice

When walking on snowy or icy ground, drive at low speed to avoid sudden start, stop or change of direction.

In snowy areas, road shoulders and objects placed on the side of the road are buried in the snow and people cannot see them. There is also the risk of the machine overturning or hitting the covered object, so always handle it carefully.

If the machine enters thick snow, there is a danger of overturning or being buried in the snow. Drive carefully and don't go over the shoulder of the road or get trapped in snow.

For frozen soil surfaces, when the temperature rises, the ground becomes soft, which may cause the machine to overturn and cause the operator to be trapped in the machine.

When parking the machine on unstable ground, lower the bulldozer.

Do not move the bucket over the head of the person

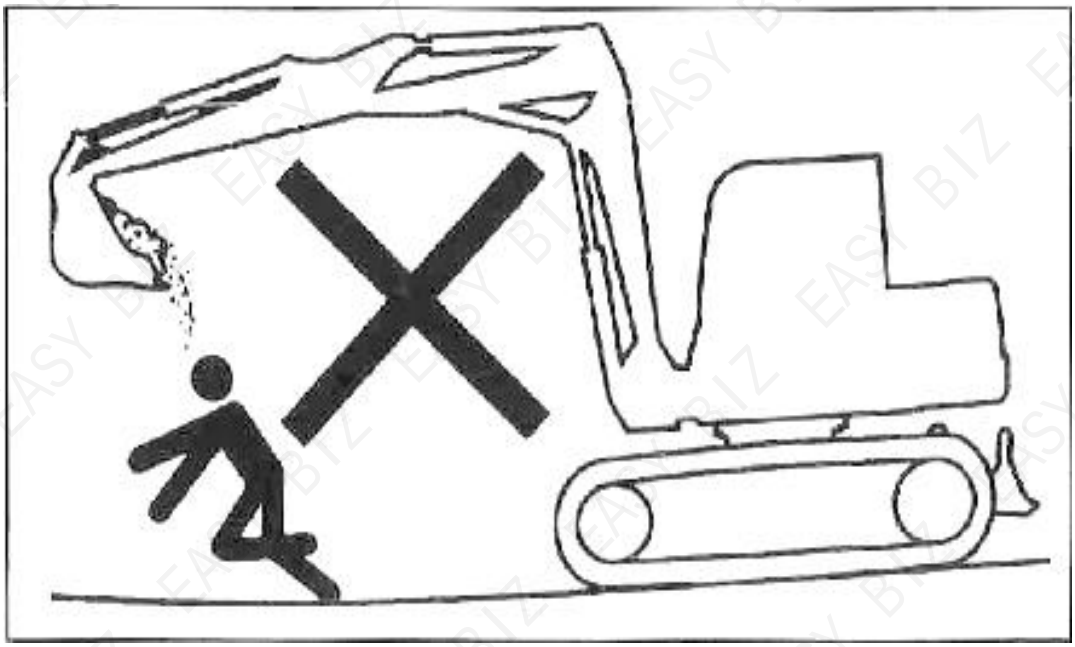

If the bucket is moved above the head of a person, there is a risk of the loaded goods falling or the bucket suddenly falling.

Ensure the safety of the driver when loading

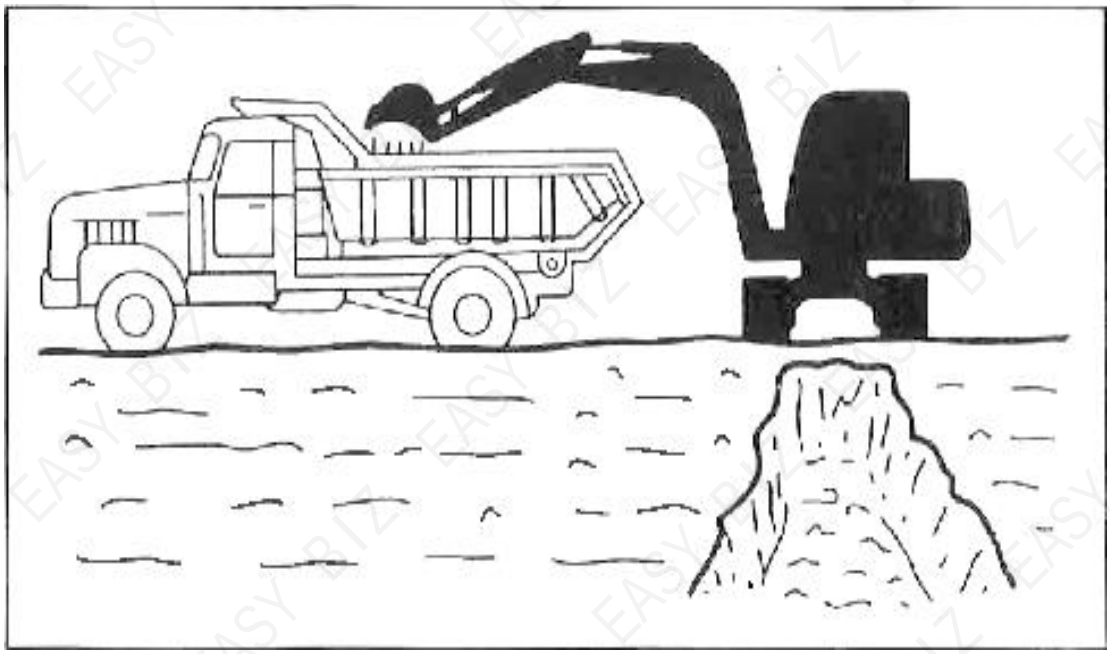

Do not load until the driver reaches a safe place.
Do not swing or park the bucket above the man or cab.

It must be loaded from behind the truck.

Keep a safe distance from overhead high-voltage cables

Do not bring any part of the machine or loaded materials close to the high-voltage cables unless all safety measures required by local and national agencies have been taken. If someone approaches the spark that is discharging and the machine that is touching the power source, there is a danger of electric shock and death.

Always maintain a safe distance between the machine and high-voltage cables.

Before starting the operation, please check with the local power company regarding the procedures for safe operation.

Treat all cables as high-voltage cables. Even if it is known that the power supply has been cut off and the cable is clearly grounded, it is treated as a live cable.

If the machine is too close to high-voltage power lines, use a signaller to issue a warning.

Note that all personnel in the work area are not allowed to approach the machine or the loaded materials.

Please also pay special attention to high-voltage cables buried in the ground.

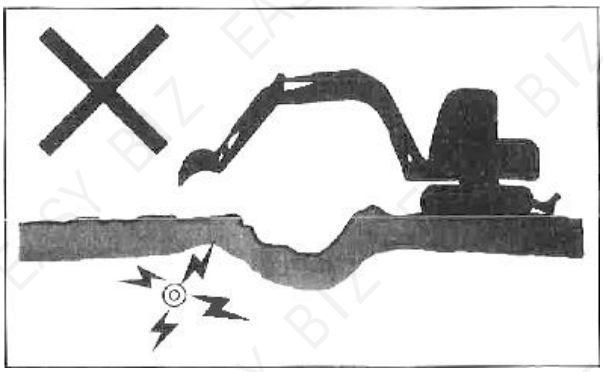

Pay close attention to hazardous working conditions

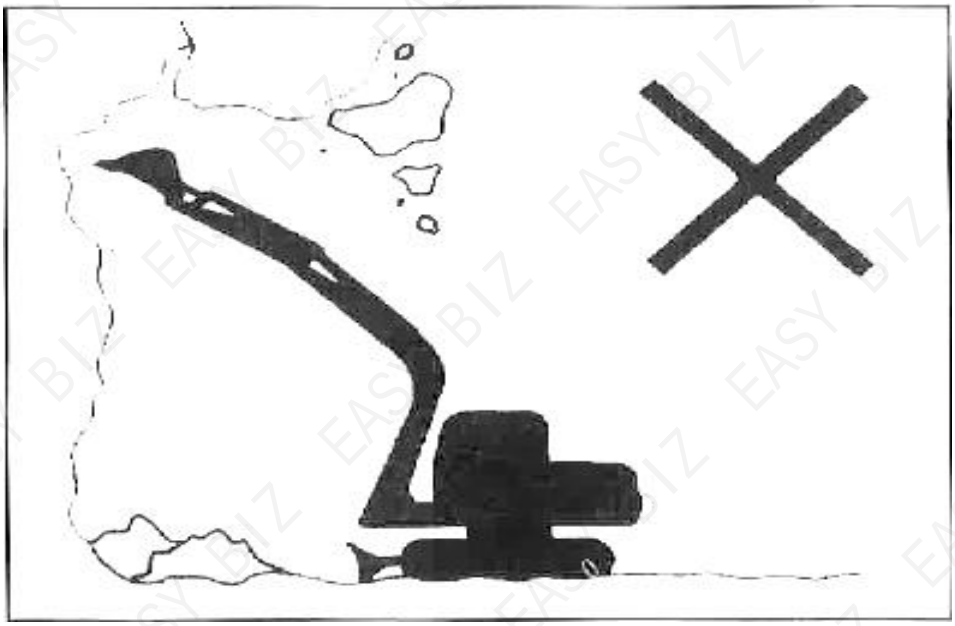

Do not excavate at the bottom of a high embankment. Doing so may cause the ground to collapse, which is very dangerous.

Do not operate in a place where there is a risk of falling rocks.

Maintain a safe distance between the machine and the edge of the excavation site. Do not dig the ground in front of the machine.

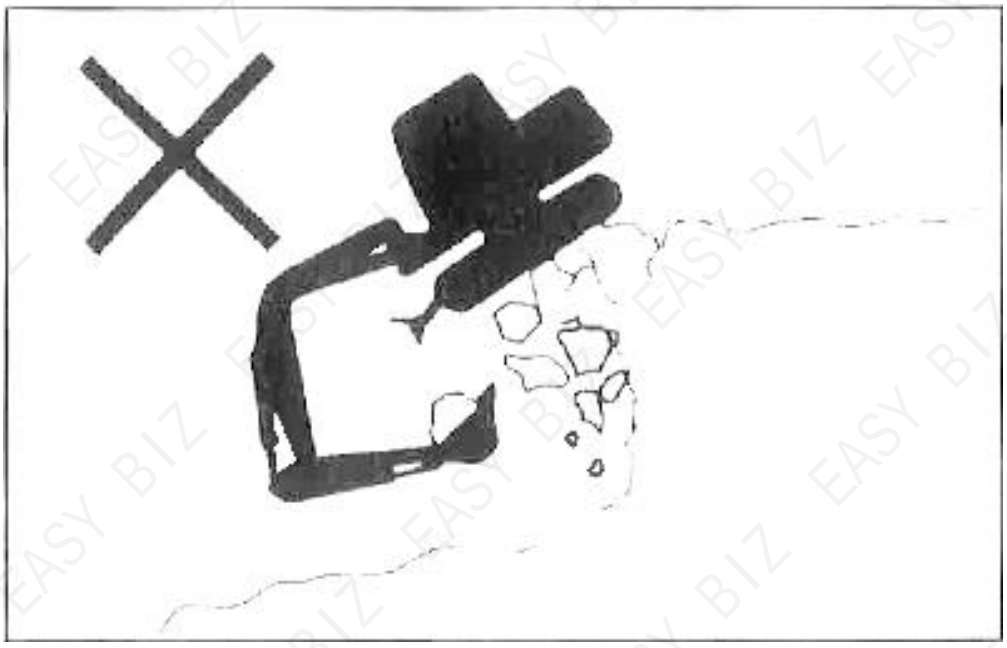

When working close to a cliff or a road shoulder, in order to make it easier to escape in the event of a problem, during operation, make the crawler track and the cliff or the road shoulder at a right angle, and place the bulldozer in the front.

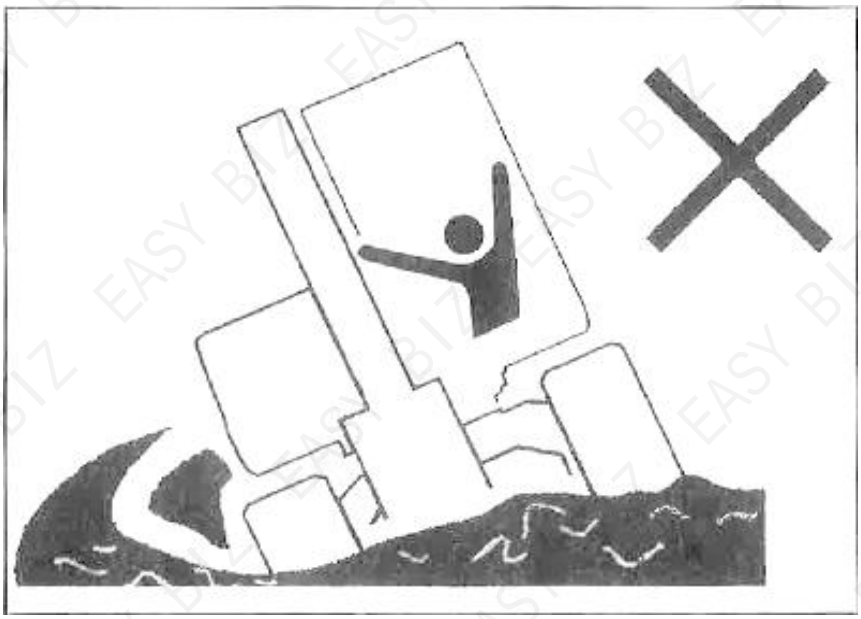

Do not enter the soft ground area. Doing so may cause the machine to tilt due to its own weight, leading to overturning or sinking into the ground.

Do not approach unstable ground (cliffs, road shoulders, deep trenches). If the ground collapses due to the weight of the machine or vibration, there may be a danger of the machine falling or overturning.

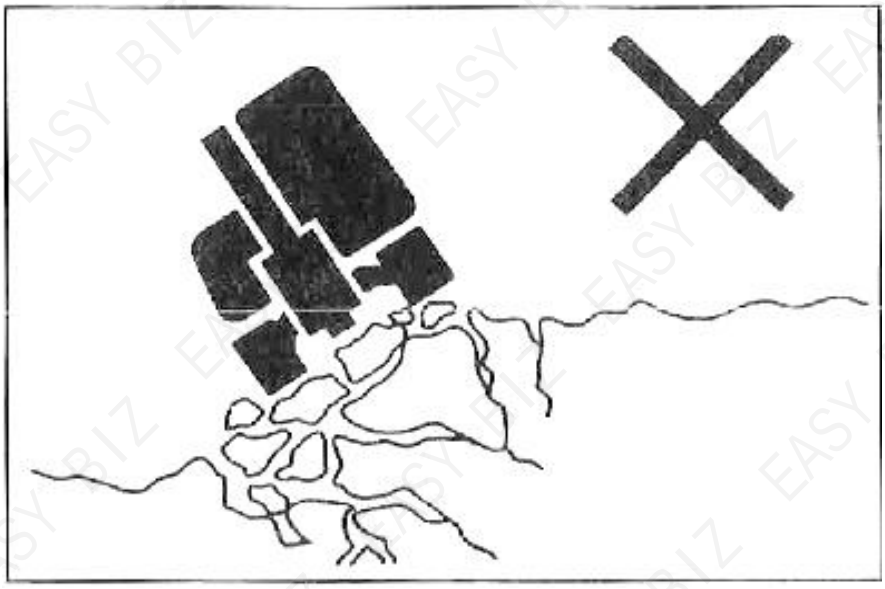

Remember, the soil is not strong after heavy rain or blasting.

The ground on the top of the embankment and around the excavated ditches is also not strong.

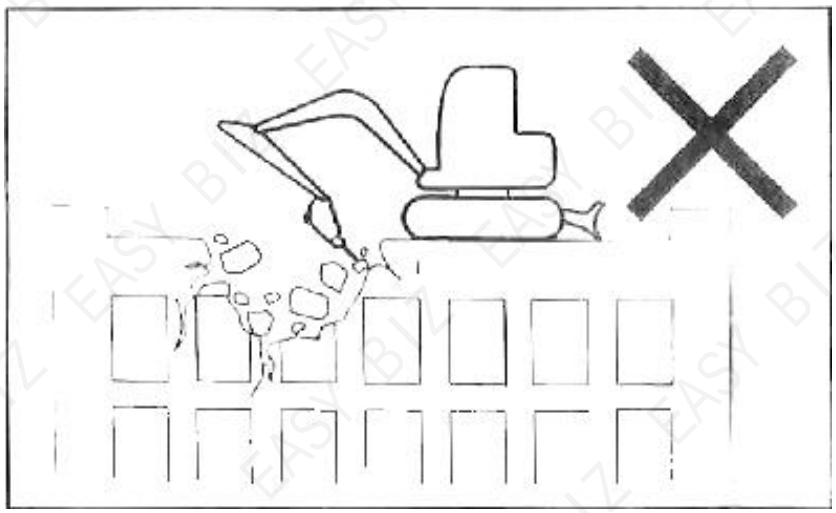

Do not disassemble under the machine. As the ground becomes unstable, there may be a danger of the machine falling.

When working on the top of a building or other structure, check the strength and structure before operation. If a building or structure collapses, it can cause serious injury or damage.

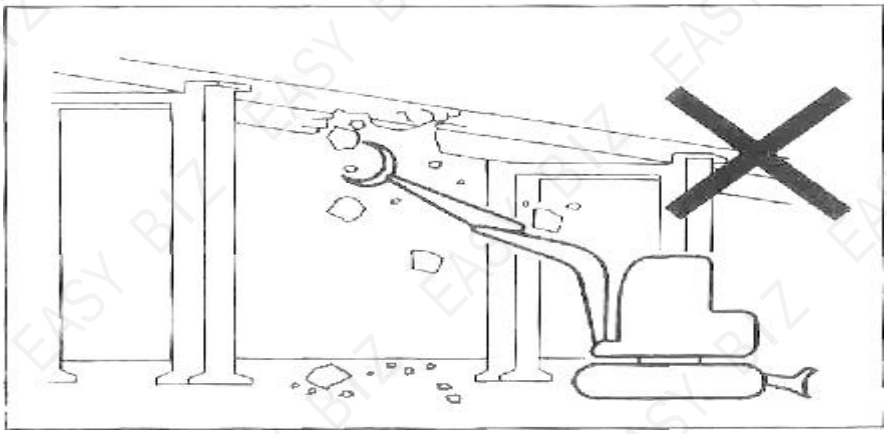

When disassembling, do not disassemble on the top of your head. Damage causes a fall or collapse of a building, causing serious injury or damage.

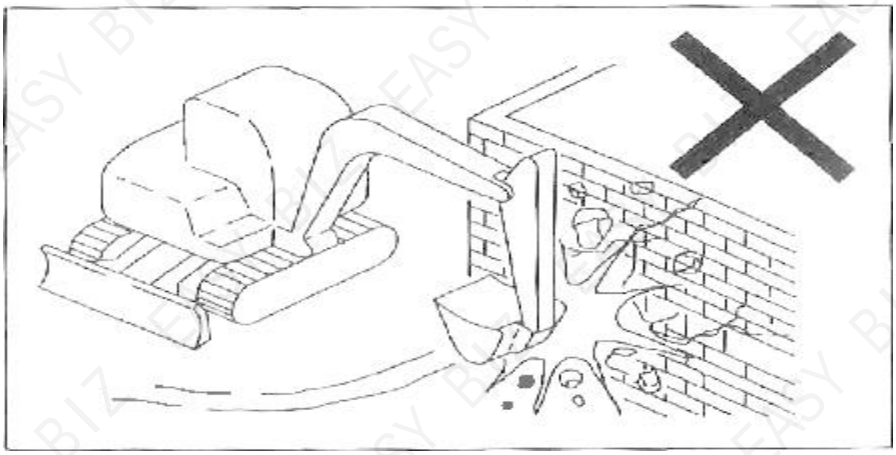

Do not use the impact force of the bucket operating device for demolition operations. Due to flying material fragments and damaged bucket operating devices can cause serious injuries.

It is dangerous to operate on slopes

When operating on slopes or ramps, turning or operating working devices may cause the machine to lose stability and overturn. Try to avoid operating on slopes.

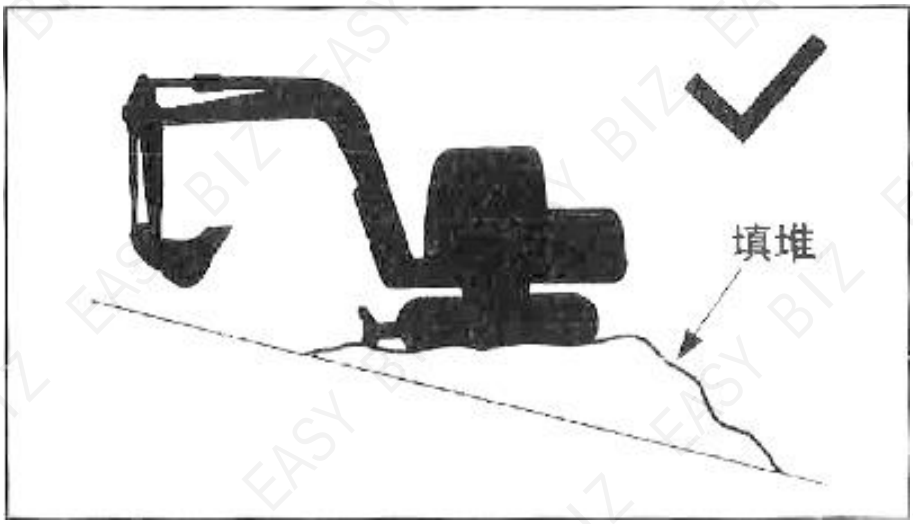

Flat work area

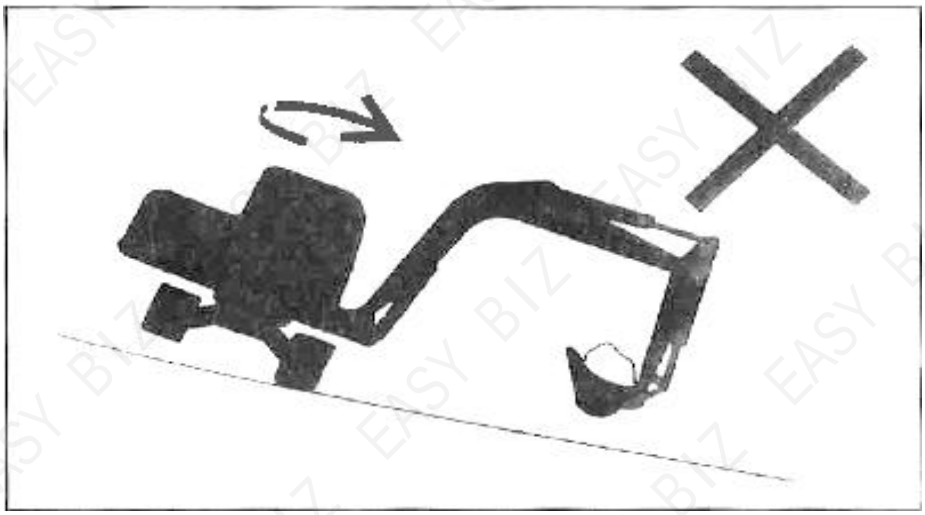

When the bucket is full of material, avoid driving downhill. This will reduce the stability of the machine and may cause overturning.

Do not turn sideways (swing) when the bucket is heavy

It is easier to overturn when the machine is in the horizontal direction than in the vertical direction.

When there is a heavy object at the end of the bucket operating device, do not turn sideways (swing). Especially do not turn sideways (swing) on slopes.

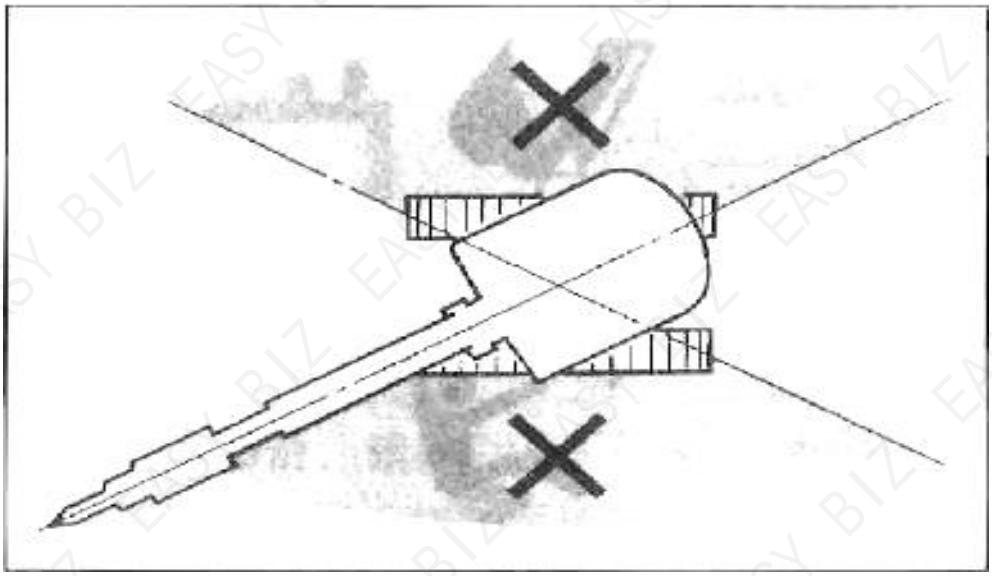

When the machine is equipped with a breaker, shredder or long stick, the end of the attachment is heavier than with a standard bucket. For such machines with heavier ends, do not move the stick (boom) downhill for excavation or sideways operation.

Please pay attention to the objects above your head

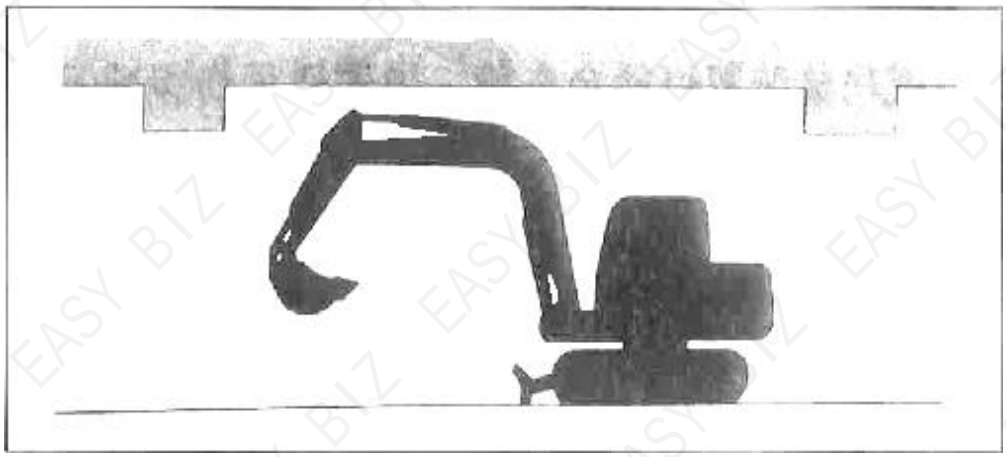

Under the bridge, in the tunnel, near the cable or indoor operation, pay attention to the arm or bucket rod do not hit the overhead objects.

The excavator is not designed for lifting operations

This machine is specially designed for excavation work. Therefore, it has no safety devices for crane operations. If the excavator is used for hoisting operations, special care should be taken.

Do not overload when hoisting. Overloading can cause the machine to overturn, causing serious injury or death.

All rated lifting capacities are based on using the machine on a stable and level ground. For safe hoisting operations, users are expected to leave a proper margin for specific working conditions. They include soft or uneven ground, non-level conditions, lateral loads, dynamic or sudden loads, hazardous environments, and personnel experience. Before operating the machine, the operator and other personnel should be very familiar with the operation manual, and should strictly abide by the safety operation regulations of the equipment at all times.

If the chain or lifting device is not connected properly, the bucket linkage or lifting device may fail, resulting in serious injury or death.

When using this machine as a crane, do not try to pull out the stump from the ground. The safety of the load acting on the machine in this application is unknown.

Do not allow anyone to stand on or under the hoisted object, or approach the work area.

Please pay attention to flying objects

This machine is not equipped with protective equipment to protect the operator from flying objects. Do not use this machine in dangerous places where the operator may be hit by flying objects.

Precautions when towing

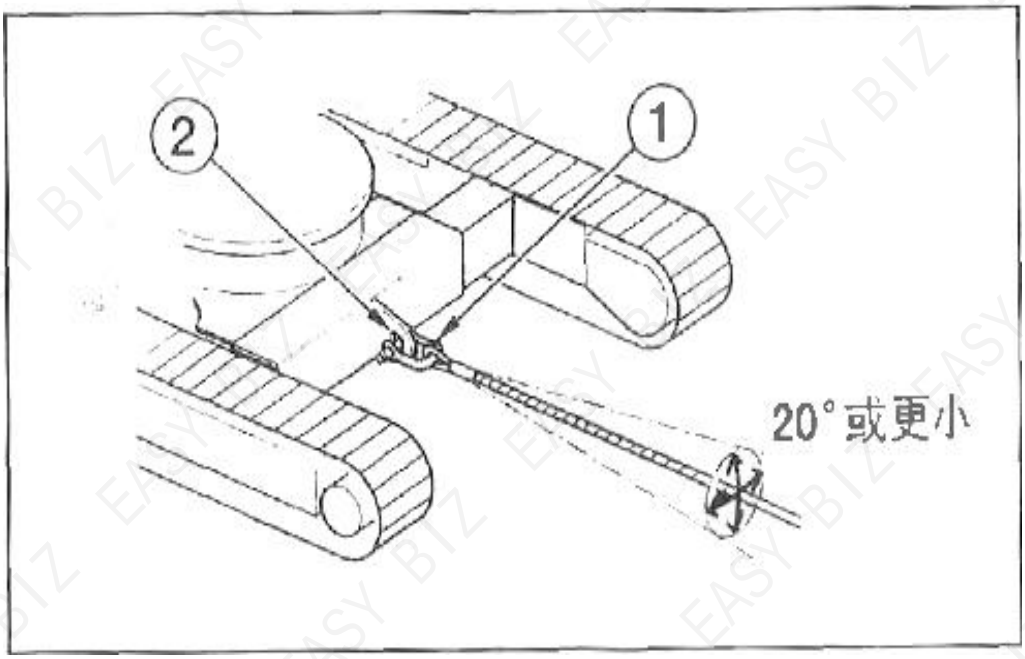

When towing, improper operation, use of the wrong cable, or improper inspection can cause serious injury or death.

It is dangerous if the cable breaks or detaches. Please use a wire rope that matches the traction.

Do not use knotted, twisted or even damaged cables.

Do not suddenly place heavy loads on the cable.

Wear safety gloves when handling cables.

Make sure that there is an operator on either the towed machine or the towed machine.

Do not tow on slopes.

Keep away from the cable while pulling.

Operating procedures

Forbidden Operations

Do not operate on bedrock (hard or soft).

Do not turn around when walking. If you must operate the bucket operating device while walking, the speed should be slow enough so that you can fully control it at all times.

Do not use rotational force for disassembly or leveling operations.

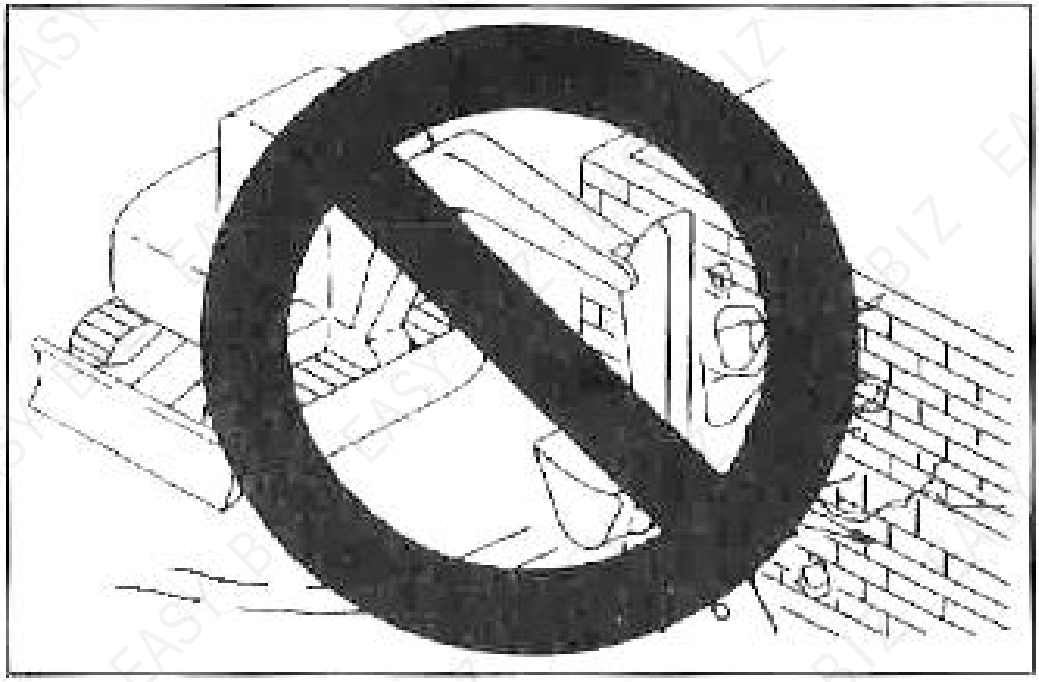

Do not use turning force to disassemble walls or level the ground. Also, do not dig the bucket teeth into the ground during the rotation. Doing so will damage the bucket operating device.

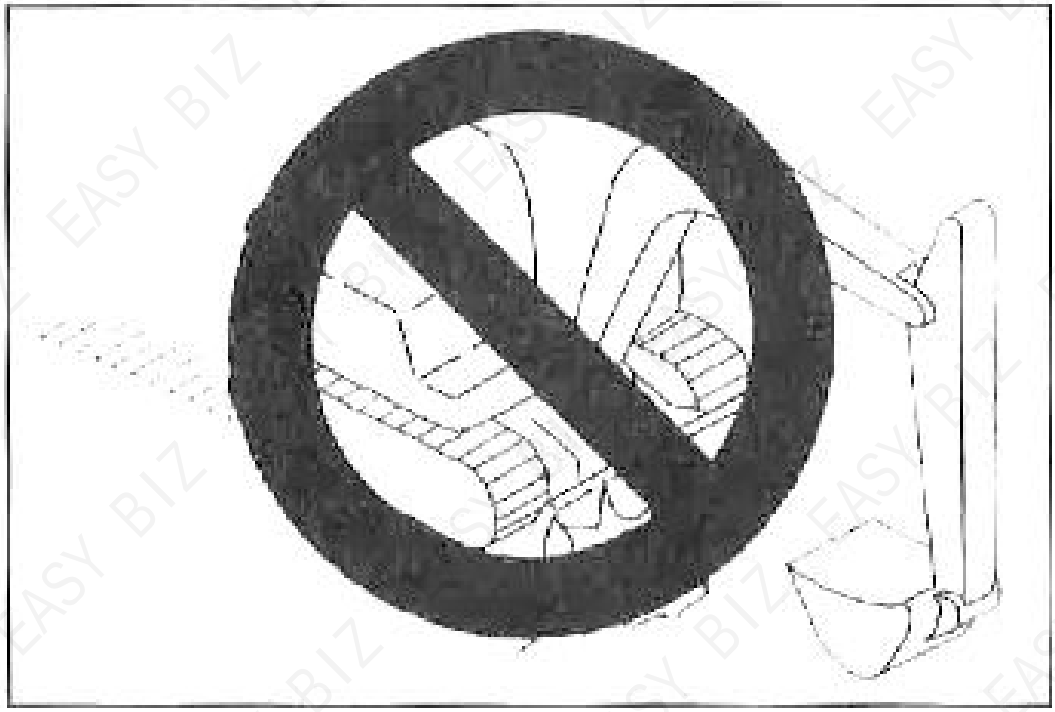

Do not dig the bucket into the ground and use walking force to dig. The use of hydraulic cylinders should be gentle.

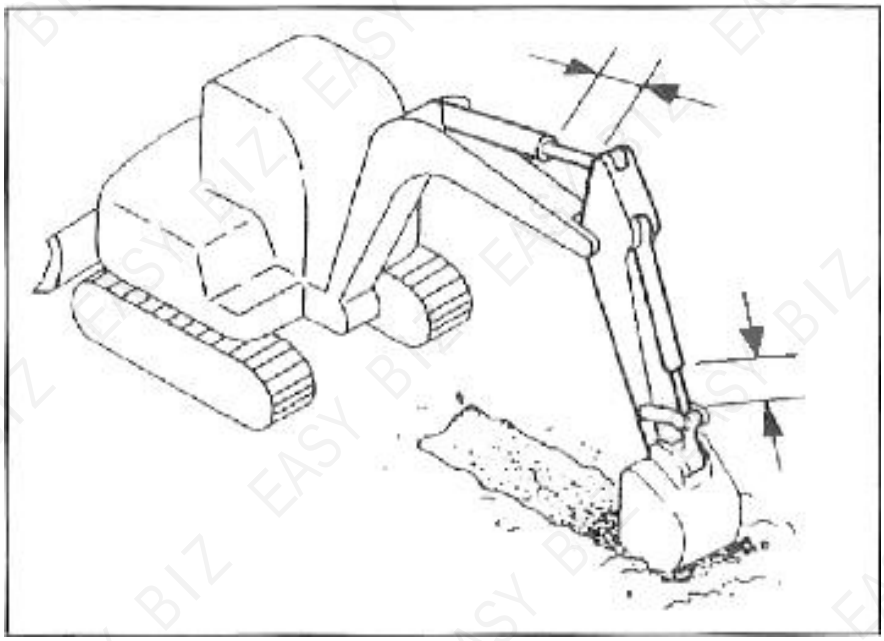

Do not extend the hydraulic cylinder to the end. When operating, we should leave some leeway.

When the body drops and the bucket rod cylinder is fully extended, do not use the bucket operation device to support the body. Doing so will concentrate the load on the bucket rod cylinder and may damage the bucket rod cylinder.

Do not use the bucket to push the machine or to dig by slamming the bucket.

Doing so will shorten the service life of the bucket operating device. Hydraulic pressure should be used for excavation.

Do not use the sinking force of the machine to perform operations.

Applying additional tension to the machine will shorten its service life. When digging, use the hydraulic pressure of the oil cylinder, the depth should be shallow, and the stroke should be large.

Excavate bedrock

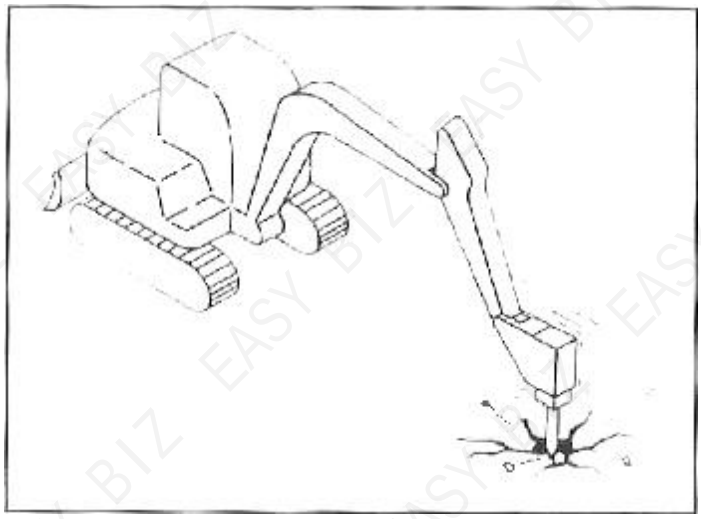

For hard bedrock, use a breaking hammer to break the rock into small pieces before digging. In this way, damage to the machine can be prevented, which is more economical.

Pay attention to the impact on the bulldozer.

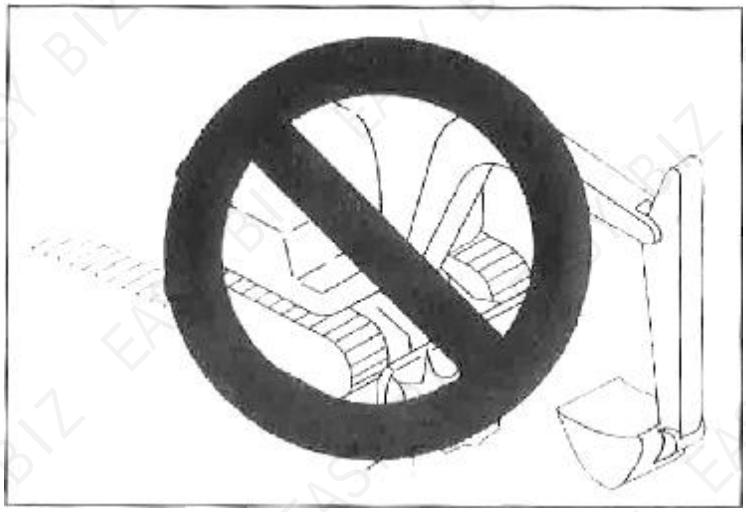

Hitting the rock with the dozer blade will damage the blade and its cylinder.

Carefully put away the bucket working device.

When the bucket operation device is retracted, pay attention not to make the bucket hit the bulldozer.

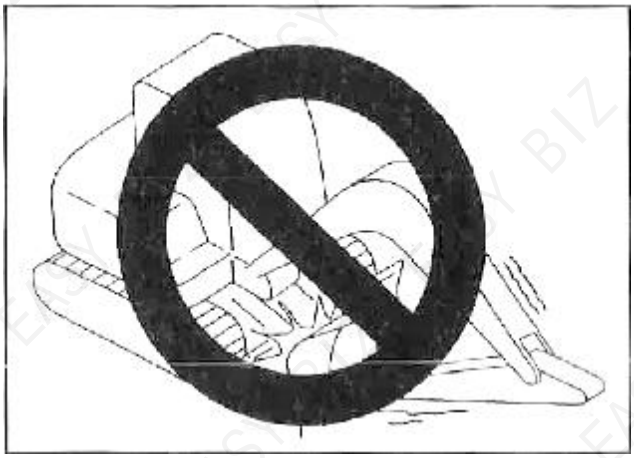

Do not use the bulldozer as a support.

Pay attention to the bulldozer when digging.

During deep excavation, if the bulldozer is in front, avoid the boom and bucket from hitting the bulldozer.

When operating, try to keep the bulldozer in the rear.

Carefully use the bulldozer to dig down.

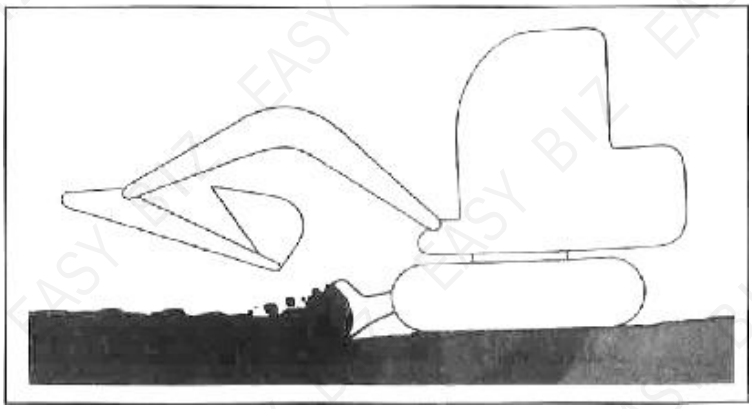

This bulldozer is designed for simple bulldozing operations. Do not use a bulldozer to dig deep. Doing so may damage the bulldozer and the frame.

Precautions in operation

Precautions when walking

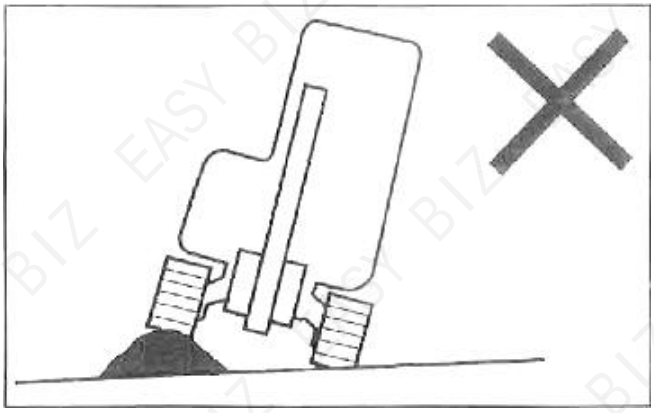

When walking on obstacles (rocks, tree stumps, etc.), a large load may be applied to the body, and it may be damaged. Try to avoid crossing obstacles. If you must do this, you should move the bucket operating device close to the ground and walk at a low speed to allow the center of the track to cross the obstacle.

Precautions when walking at high speed

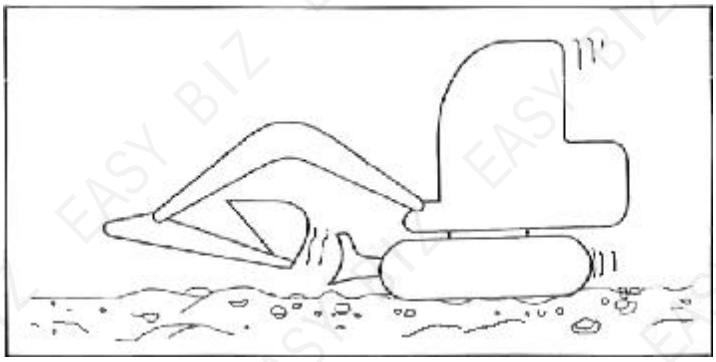

On uneven roads, keep walking at a low speed and avoid sudden starts, stops or changes of direction.

When walking at high speed, the bulldozer should be in front.

Precautions when using this machine in water

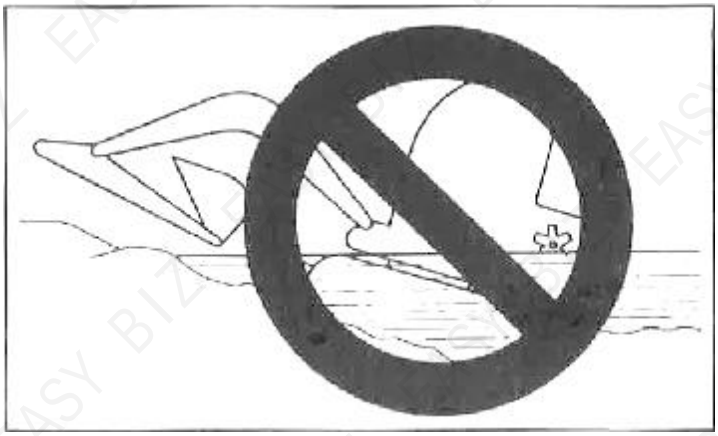

If the rear of the machine is immersed in water as shown in the figure above, it will cause the radiator fan to rotate in the water, resulting in damage to the fan. The rear of the machine must not be immersed in water.

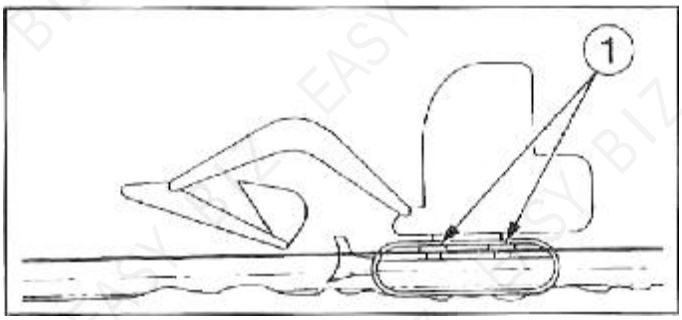

Allowable water depth

The machine can only be used in water when the water does not exceed the middle of the crawler plate.

For those parts that have been used in water for a long time, enough grease should be added until the old grease is squeezed out.

Never immerse the slewing bearing or the main body in water or sand. If it is submerged, please contact Shandong Qilu Industrial Co., Ltd. for inspection.

Out of the mud

If the machine is stuck in mud, please follow the following steps to exit.

If a track gets stuck in the mud

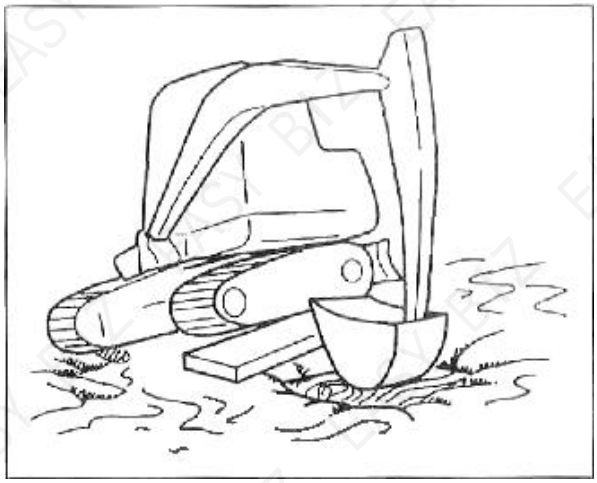

1. Swing the bucket to the side of the track stuck in the mud.
2. Set the angle of the stick and boom to 90° to 110°.
3. Press the bottom of the bucket (not the teeth) on the ground.
4. Place a wooden board or similar object under the lifted track.
5. Lift the bucket and slowly drive the machine out of the mud.

If both tracks are in the mud

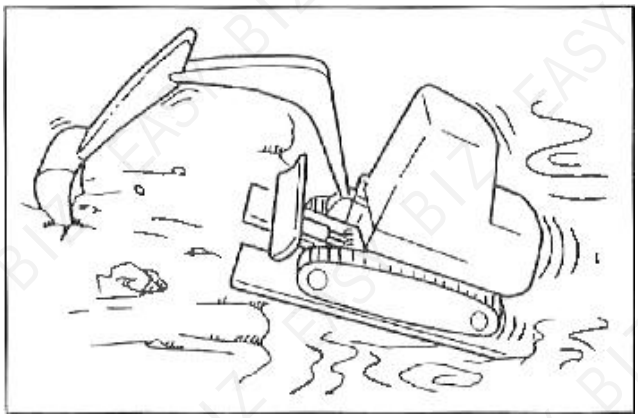

1. Perform steps 1 to 4 above for the two tracks.
2. In front of the machine, dig the bucket into the ground.
3. Pull the stick when walking forward to slowly move the machine out.

Digging

1. Place the bulldozer on the opposite side of the excavation area.
2. Dig with stick and bucket. When digging, the depth should be shallow and the stroke should be long. The maximum digging force is when the angle between the boom and the stick is 80° to 120°. This angle should be used for effective excavation.

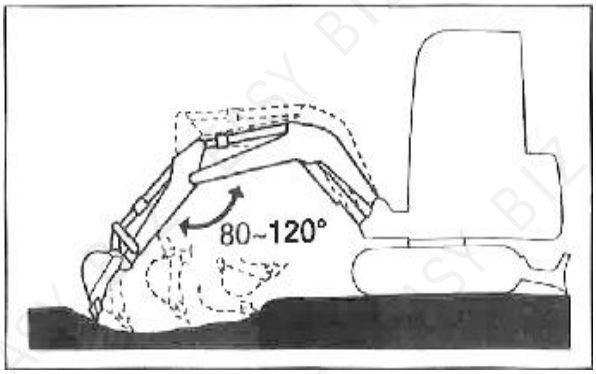

Digging ditches

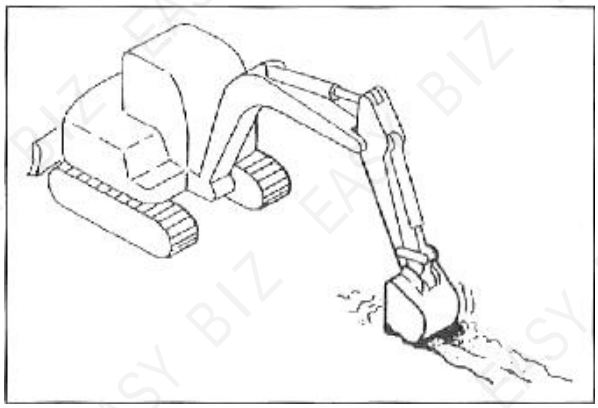

Install a bucket suitable for digging ditches and adjust the track to a position parallel to the ditches to be dug to improve efficiency.

When digging a wide trench, dig the side first, then the middle.

Leveling

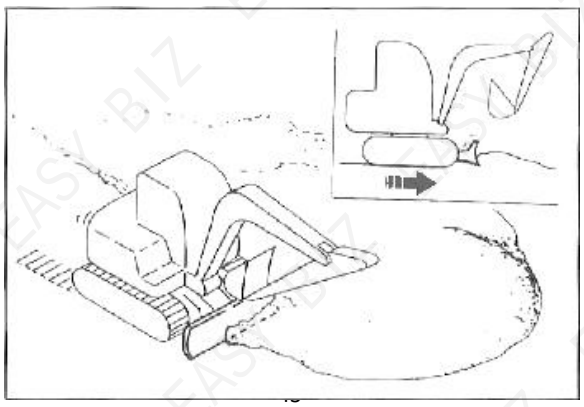

1. Bring the bucket working device close to the machine body.
2. Slowly push the soil away from the side of the mound.
3. When the mound is low, push the soil from the top. If the load is too heavy for the body, raise or lower the bulldozer to make appropriate adjustments.

Handling rubber tracks

Due to the use of rubber, rubber tracks have an inherent weakness, that is, lack of strength.

Please be sure to observe the following prohibitions and precautions to prevent the track from being damaged or falling off.

Ban

Do not walk or operate the machine in the following places:
Walking and turning on gravel, extremely rough and hard rocks, steel beams, scrap iron, or near the edge of the steel plate will damage the rubber track.

Walking on a river bed or a place with a lot of pebbles may cause stones to get stuck in the track and damage the track, or cause the track to fall off.

Do not use this unit at the seaside. Salt may corrode the steel core.

Do not allow fuel, lubricating oil, salt or chemical solvents to adhere to the track. These substances may corrode the welds of the steel core on the track and cause rust or peeling. If any of these substances get on the track, it should be cleaned immediately with water.

If the machine walks on an irregular surface, such as a recently paved asphalt road, exposed to a campfire, or walking on a hot iron plate under the scorching sun, it will cause unconventional wear or damage to the rubber track.

Do not move the rubber track to the ground where it may slip. Otherwise, it may accelerate the wear of the rubber track.

Precautions

When operating this machine, please observe the following precautions:

Do not use the bucket operating device to rotate the lower frame when the front of the fuselage is raised (the upper vehicle does not rotate). Otherwise, the load will be concentrated on a single point to twist the crawler, causing rapid damage to the crawler.

At any time, please try to avoid abruptly changing the course or turning in place on the concrete surface. Doing so will wear or damage the rubber track.

Avoid falling to cause strong impact on the rubber track.

Salt, potassium chloride, ammonium sulfate, potassium sulfate, and calcium phosphate can damage the track. If any of these materials get on the track, it should be washed thoroughly with water immediately.

Do not let the sides of the rubber track rub against concrete or walls.

Do not let the bucket hit the rubber track and cause damage to the track.

Be especially careful on snowy or frozen surfaces in winter, because the track is prone to slip under such conditions.

Please use the rubber track between -25°C and +55°C.

When storing rubber tracks for a long time (three months or longer), please store them indoors where they are not exposed to direct sunlight or rain.

Since the entire handle is made of rubber, the rubber track is not as stable as the steel track. Be especially careful when turning and swinging sideways.

Prevent rubber track from falling off

Observe the following precautions to prevent the track from falling off.

Keep the tracks at proper tension at all times.

When crossing large steps such as cobblestones or rocks (20 cm or more), vehicles should climb the steps at right angles and do not change course over the steps.

When reversing and climbing, do not change direction at the starting point of the slope.

Please avoid walking when one crawler is placed on a slope or protruding part, and the other crawler is placed on a flat surface (this time the machine is inclined at an angle of 10° or more), and please walk when both crawlers are placed on a flat surface.

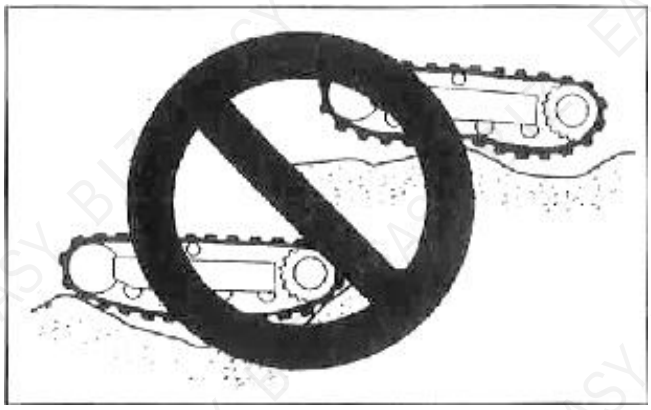

When the track is slack as shown in the picture, do not change the direction

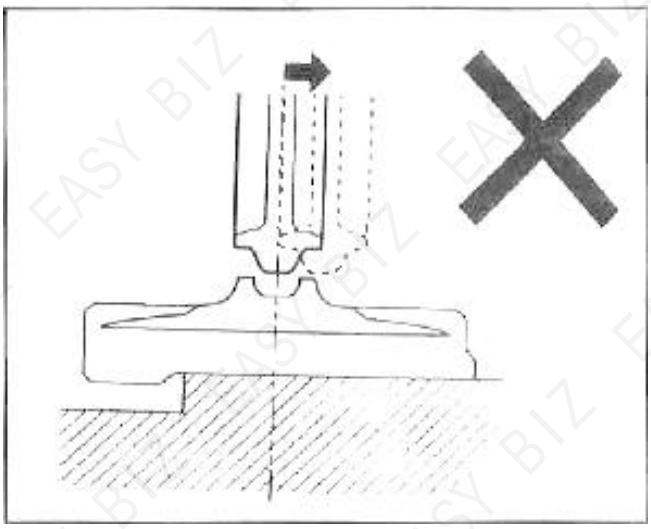

In this case, if the machine walks backward, the rubber track will fall off.

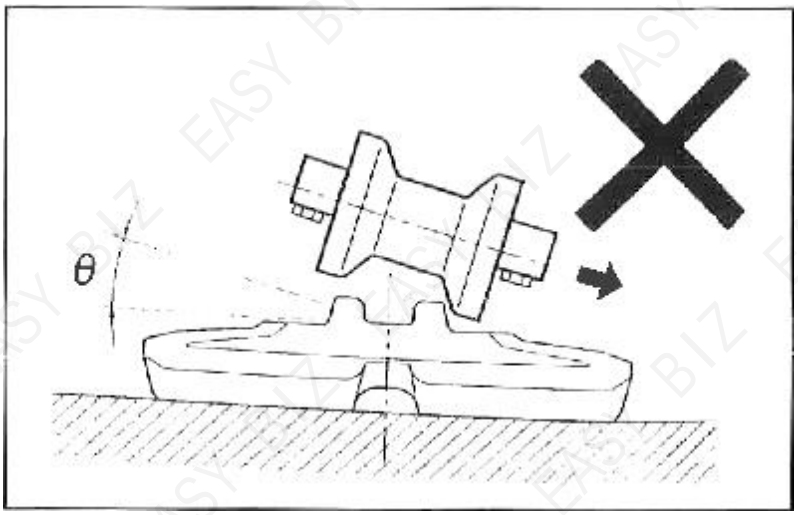

In this case, if the machine rotates, the rubber track will fall off.

Hydraulic breaker

For the operation of the breaker, please refer to the separate hydraulic breaker manual.

When using the breaker and walking, work intermittently; for specific conditions, please contact your sales or service agent.

When installing options such as breaker, tilt bucket or grab bucket, please make sure that it is suitable for the machine model you are using.

When choosing accessories, please contact your sales or service agent.

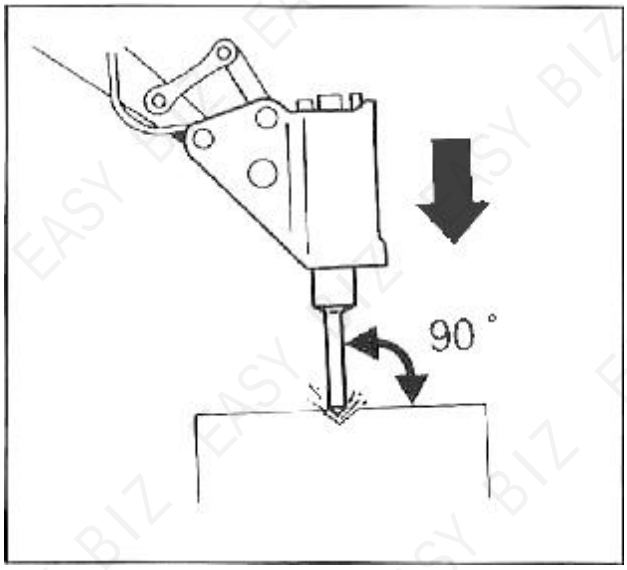

Use a hammer head perpendicular to the working surface for crushing operations.

When crushing, the hammer head should be properly aligned with the object to be crushed to avoid hitting the air.

Do not pry with a hammer, and do not pry when broken.

Do not move the hammer head when breaking.

Do not continue to impact on the same surface for more than 30 seconds.

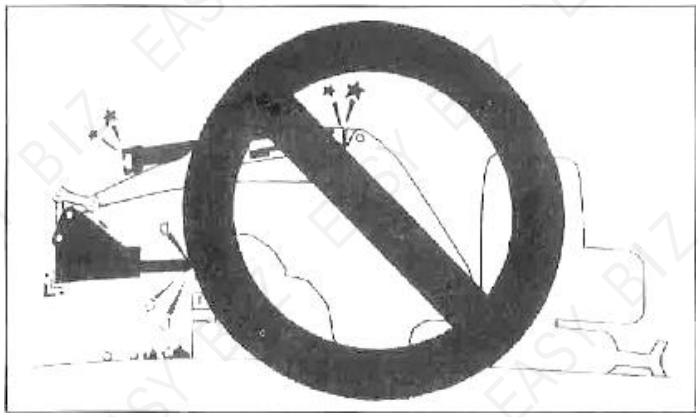

Do not break when the cylinder is fully extended or fully retracted (end of stroke). , Leave a gap of at least 50mm.

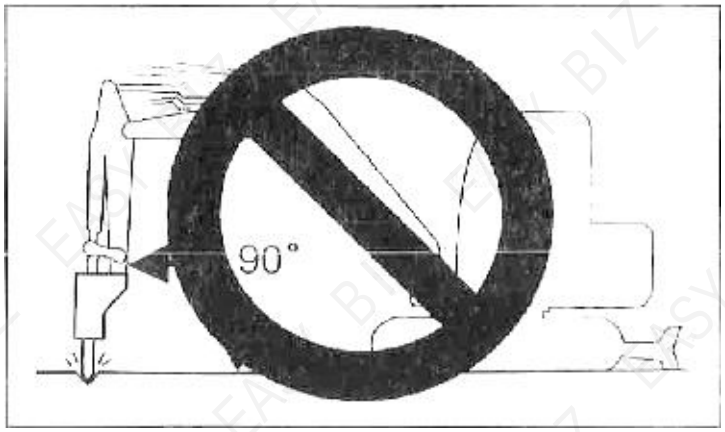

Do not break the stick when it is placed perpendicular to the ground.

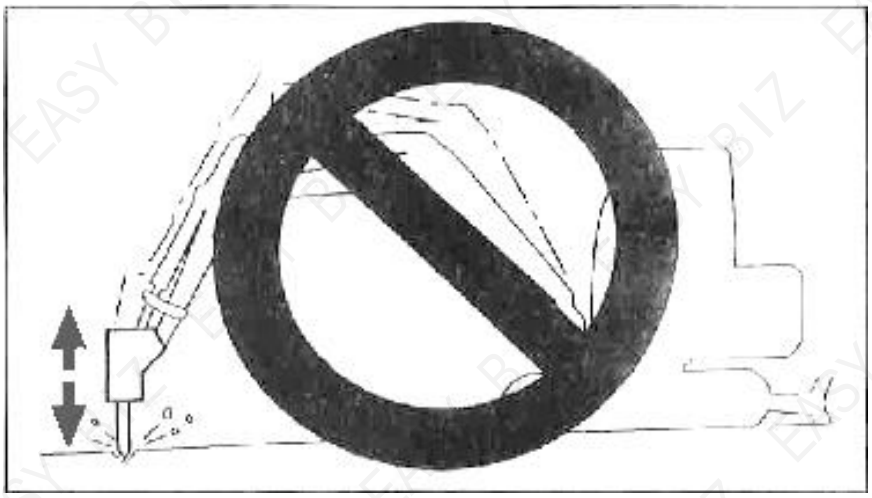

Do not let the breaker fall by itself and hit the object to be broken for breaking.

Do not use a breaker to move objects or rocks to be broken.

Rotate the machine from time to time to cool the engine.

If the hydraulic pipe vibrates abnormally, it may be a leak of nitrogen in the accumulator. Please check as soon as possible.

Precautions when stopping

Safe parking

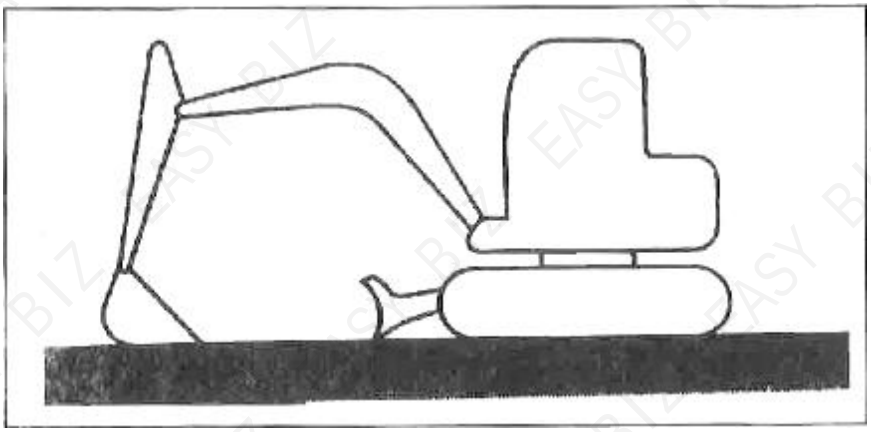

Park the machine on a level, firm and safe ground. Set the parking device.

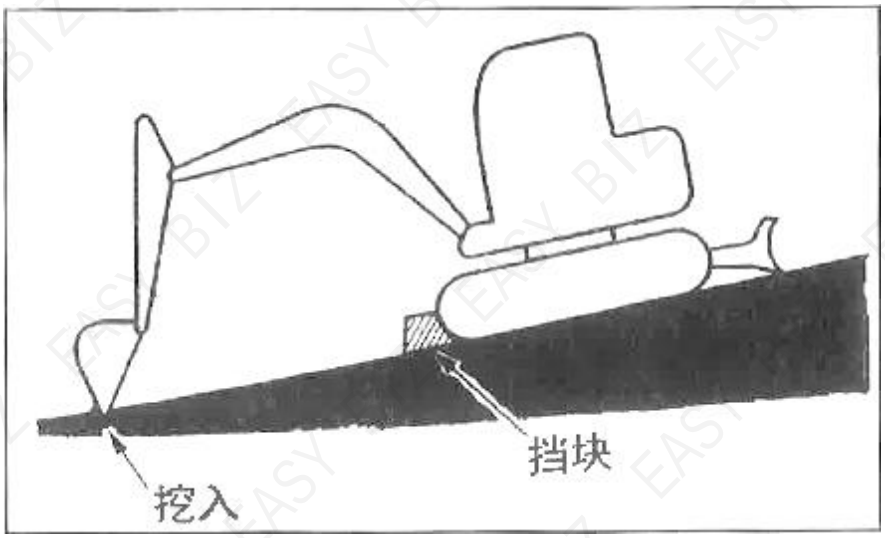

If you must park or tilt the machine on a slope, park the machine firmly and prevent it from moving.

When parking on the street, you should use fences, warning signs, lights and other items that make the machine easy to see even at night to avoid collisions with other vehicles.

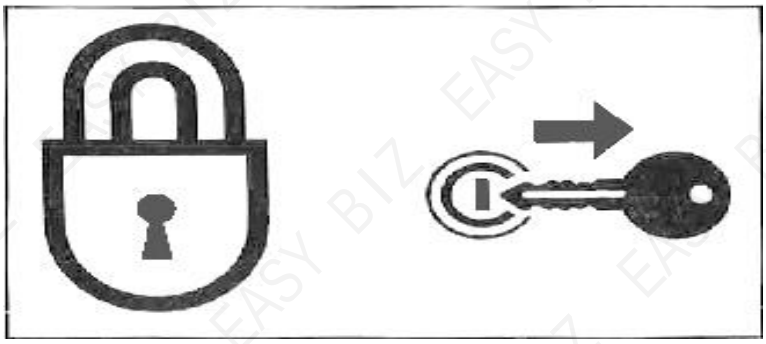

Before leaving the machine, do the following:
Lower the bucket and bulldozer to the ground.
Turn off the engine and remove the start key.
Lock the cab and lid and take the keys.

Precautions during transportation

Safe loading/unloading of machines

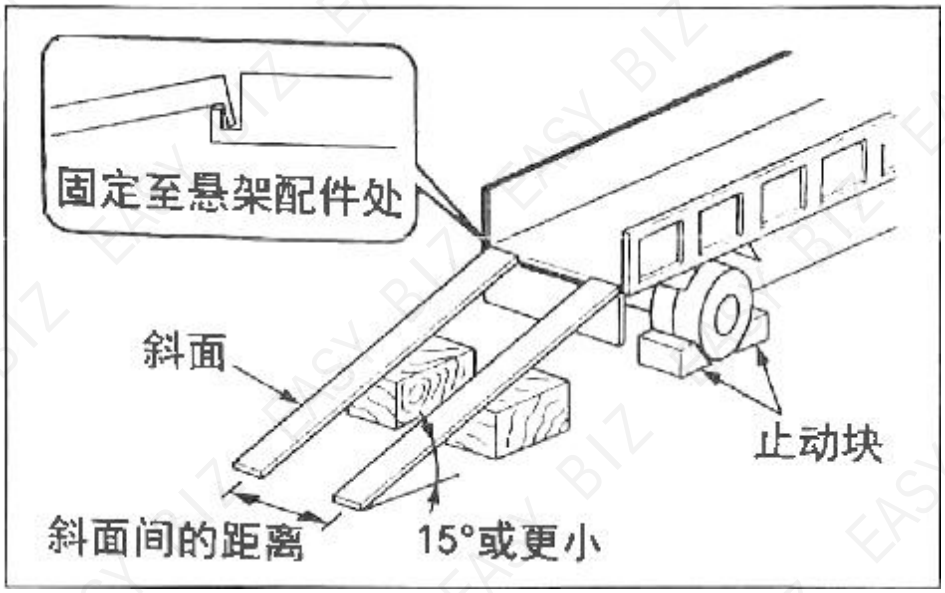

During loading and unloading, the machine may overturn or fall. Please take the following safety measures:

Choose a solid and level ground and keep a sufficient distance from the road shoulder.

Fix a slope of sufficient strength and size to the truck bed. The slope of the slope shall not exceed 15°. If the ramp bends down too much, use

pillars or pads to support it.

Never use working devices to load or unload the machine. Doing so may cause the machine to overturn or fall.

Keep the truck compartment and loading surface clean and free of oil, sand, ice, snow and other foreign objects to prevent the machine from sliding. Clean the tracks.

Cock the wheels of the transporter to prevent movement.

When loading and unloading the machine, please follow the signal of the signalman and walk slowly at a low speed.

It is not allowed to change the course on the slope.

Do not turn/swing on an inclined surface. The machine may tip over.

When turning/swinging on a truck, the footing may not be stable enough, so you should pass slowly.

If possible, lock the door and cover after loading. Otherwise, it may open during transportation.

Use wedges to secure the track, and then use cables or chains to fasten the machine to the truck compartment.

Safe hoisting machine

Master and use correct lifting gestures.

Check the lifting equipment every day to see if any parts are damaged or missing, and replace if necessary.

When hoisting, please use a cable that can lift the weight of the machine.

Lift the machine according to the procedure described below. Do not operate in any other way, otherwise it may cause the machine to become unbalanced.

Do not hoist when there are operators on the machine.

When hoisting, please proceed slowly to prevent the machine from overturning. ,

Keep all personnel away from the work area when hoisting. Do not move the machine above people's heads.

Safe transport of machines

When transporting the machine, you should understand and follow the applicable safety regulations, vehicle codes, and traffic rules.

The length, width, height and weight of the transport truck after

loading the machine should be considered to select the best transport route.

Do not start or stop suddenly or drive at high speed during transportation. Otherwise, the loaded machine will move or lose its balance.

Precautions for maintenance

Mark "do not operate" warning message.

When inspecting or maintaining the machine, if an unauthorized person starts the engine or touches the control, it may cause serious injury.

Before performing maintenance, turn off the engine, remove the key, and carry it with you.

Mark the “do not operate” warning message in a conspicuous place such as the start switch or control lever

Use the right tools

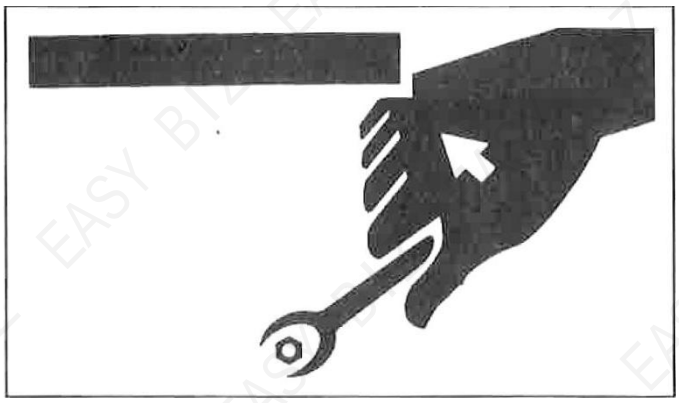

Do not use damaged or degraded tools, or tools designed for other purposes. Use tools suitable for related tasks.

Regular replacement of safety-critical components

To ensure that the machine can be used safely for a longer period of time, regular refueling, inspection and maintenance should be carried out. To improve safety, please replace safety-critical parts such as hoses and seat belts regularly.

"Regularly replaced safety-critical components" refers to components that age, wear, and degrade after repeated use, and whose performance may change over time. These characteristics of such components can cause serious mechanical damage or personal injury, and it is difficult to judge the remaining service life of such components based solely on the appearance inspection or handling feel.

Once any damage is found during visual inspection of its appearance, please replace the "regularly replaced safety-critical components", even if the specified replacement interval has not been reached.

Replace the fuel hose regularly. Fuel hoses will wear out over time, even if they have not yet shown any signs of wear.

Replace it as soon as symptoms of wear are found, regardless of the replacement schedule.

To use the machine safely, perform regular inspections and maintenance. The following safety-critical components must be replaced regularly to improve safety. Damage to these components can cause serious injury or fire.

Safety Critical Parts List

Body	Regular replacement of safety-critical components	Replacement time
Fuel system	Fuel pipe	Every 2 years
	Filler on fuel tank cover	

Hydraulic system	Host	Hydraulic pipe(pump outlet)	
		Hydraulic pipe (suction port of pump)	
		Hydraulic pipe (rotary motor)	
		Hydraulic pipe (walking motor)	
	working equipment	Hydraulic pipe (boom cylinder pipe)	
		Hydraulic pipe (stick cylinder pipe)	
		Hydraulic pipe (bucket cylinder pipe)	
		Hydraulic pipe (swing cylinder)	
		Hydraulic pipe (bulldozer cylinder)	
		Hydraulic pipe (pilot valve)	
		Hydraulic pipe (auxiliary pipe)	

Explosion-proof lighting

燃油、润滑油、冷却液或电瓶电解液时，

When checking fuel, lubricating oil, coolant or battery electrolyte, use explosion-proof lights to prevent fire or explosion. Otherwise, an explosion may occur, causing serious casualties.

Unauthorized personnel are strictly prohibited from entering

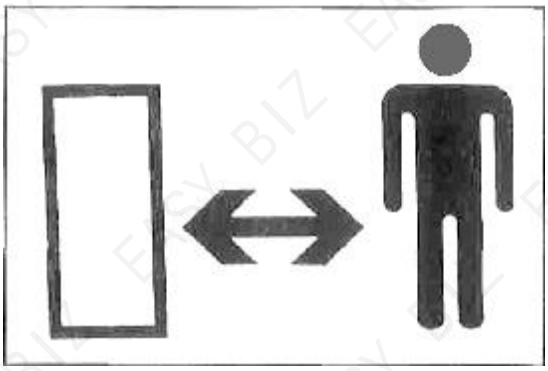

During operation, do not allow unauthorized personnel to enter the work area. Please be careful when grinding, welding or using a hammer. You may be injured by flying debris from the machine.

Work area preparation

Choose a stable and flat work area. Ensure proper lighting conditions, such as indoor work, should ensure ventilation.

Always keep the machine clean

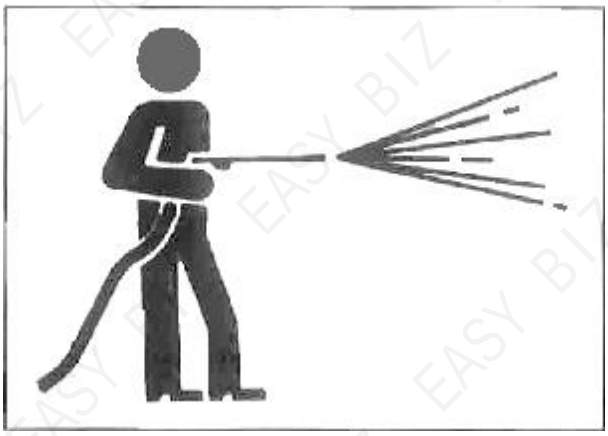

Before maintenance, the machine should be cleaned.

Turn off the engine before cleaning the machine. Cover the electrical parts to prevent water from entering. Water in electrical components may cause short circuits or malfunctions. Do not clean the battery, electronic control components, sensors, connectors or cab with water or steam.

Turn off the engine before maintenance

When the machine is running, or when the machine is not running but the engine is running, avoid lubricating or mechanically adjusting the machine.

If maintenance must be performed while the engine is running, two people should be arranged to work in a team and maintain communication with each other.

A person must sit in the driver's seat so that the engine can be turned off immediately if necessary. This person must pay special attention not to touch the control rods and pedals, except when needed.

The other person performing maintenance must keep his body or clothing away from the moving parts of the machine.

Keep away from moving parts

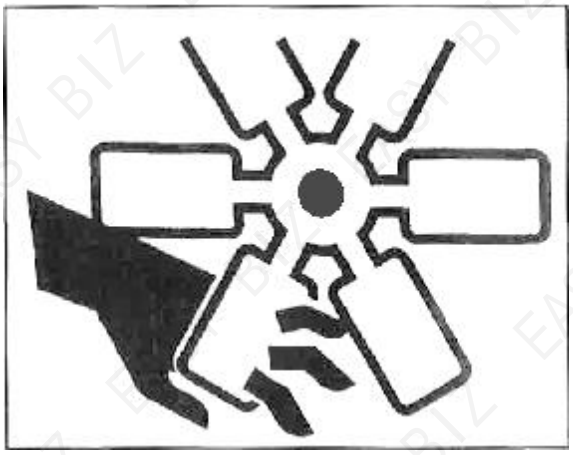

Keep away from all rotating and moving parts. If a hand or tool gets stuck in a rotating or moving part, it may cause serious injury or even death.

If tools or other objects are thrown or inserted into the fan or fan belt,

these objects will be blown or shredded. Do not throw or insert anything into the fan or fan belt.

Firmly fix the machine or any parts that may fall

Before performing maintenance or repairs under the machine, all movable working devices should be lowered to the ground or in the lowest position.

Fixed track

If you must work under a lifted machine or equipment, always use wooden blocks, jacks or other strong and stable supports for fixing. Do not go under the machine or working device before it is firmly supported. This procedure is especially important when working with hydraulic cylinders.

Stable working device

To prevent accidental movement of the machine when repairing, replacing bucket teeth or side teeth, the working device should be firmly fixed.

When opening the engine cover or the rear cover to stabilize it

Before working inside the machine, be sure to fix the engine cover or cover. Please keep the engine cover or rear cover closed in windy weather or when the machine is parked on a slope.

Place heavy objects in a stable position

In the process of disassembly or installation, when you need to temporarily place heavy objects or accessories on the ground, be sure to place them in a stable place. Keep unauthorized persons away from places where such items are stored.

Refueling matters needing attention

No smoking or open flames are allowed when refueling or near the refueling point.

When the engine is running or has not yet cooled down, do not remove the fuel tank cap or refuel. Do not spill fuel on the hot surface of the machine.

Fill the fuel tank in a well-ventilated area.

Do not fill up the fuel tank. There should be room for oil expansion.

Spilled fuel should be wiped clean immediately.

Tighten the fuel tank securely. If the fuel tank cap is lost, only use the

original to replace it.

Using an unauthorized and poorly ventilated fuel tank cap will cause internal pressure in the fuel tank.

Prevent dust from entering

When installing and disassembling parts, they should be done in a dust-free place. Clean the work area and clean the parts to prevent dust from entering.

Clean the installation surface

When installing and removing parts, make sure that the contact surfaces of the parts are clean. If the sealing groove of the contact surface is damaged, please contact your sales or service agent for repair or release.

Seal ring and split pin

Be sure to replace all the removed seal rings and split pins with new ones. When installing, be careful not to damage or twist the sealing ring.

Sealing ring

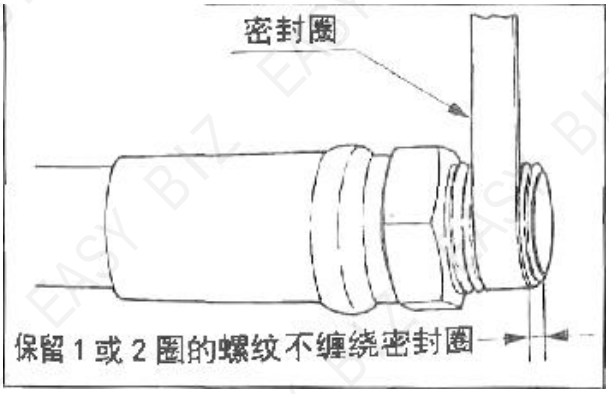

When wrapping the screw plug with seal tape, clean the old seal tape on the threads and clean the threads.

Wrap the thread tightly with a sealing ring, paying attention to 1 or 2 on the top of the plug.

Do not use fuel for cleaning

Use the correct fuel grade for fuel and lubricating oil according to the season.

Please refer to the following table to select the appropriate fuel, lubricating oil and grease according to the temperature. Regardless of whether the specified time has elapsed, if the oil becomes too dirty or has deteriorated, replace it.

When refueling, do not mix oils of different brands. If you want to change the brand, please change all fuel/lubricating oil.

Fuel oil

Diesel should meet the following specifications. This table lists several diesel specifications currently in the world.

Diesel specification	Part	Diesel specification	Part
GB252	China	BS2869-A1 or A2	United Kingdom
ASTM D975 No.：1-D，S15	United States Canada	IS0 8217DMX	international
Biodiesel Biodiesel blended as B5 ASTM D6751, D7467			
EN590：96	European Union	JIS K2204 Level 2	Japan
Biodiesel blended as B5 ENI4214, EN590			

Diesel fuel tank

To maintain the performance and service life of the engine, always use clean, high-quality fuel.

In order to prevent freezing in cold weather, please select diesel that is still applicable when the actual temperature is at least 12°C lower than

the estimated minimum outdoor temperature.

Please use diesel with a cetane number of 45 or above. When used in high-cold or high-altitude areas, fuel with a higher cetane number is required.

Use fuel with a sulfur content of less than 0.05-0.0015% by volume. (In the United States or Canada, ultra-low sulfur fuel should be used) The use of fuel with high sulfur content may cause sulfuric acid corrosion in the engine cylinder.

The use of kerosene is prohibited. Never mix kerosene, used engine lubricating oil or residual fuel oil with diesel.

Poor quality fuel can reduce engine performance or cause engine damage. It is not recommended to use fuel additives. Certain fuel additives can cause engine performance degradation.

Metal content, such as zinc, sodium, magnesium, silicon, and aluminum, must be limited to 1 mass ppm or less.

Safety measures when using biodiesel, the engine manufacturer's warranty is invalid for machines that use biodiesel that does not meet the standards or has deteriorated.

lubricating oil

Periodic checklist																						
No.	period		Quan	The time shown by the hour meter																After that	Refer-
	project		-tity	50	100	150	200	250	300	350	400	450	500	550	600	650	700	750	800		ence
1	Bucket pin	Fill	4																	every day	42
2	Swing pivot pin	Fill	2																	every day	42
3	Boom root pin	Fill	1																	every day	42
4	Boom cylinder boss	Fill grease	2																	every day	42
5	fuel	drain	1	0	0	0	0	0	0	0	0	0	0	0	0	0	0	0	0	Every 50	43
6	Battery fluid	an	1	0	0	0	0	0	0	0	0	0	0	0	0	0	0	0	0	Every 50	44
7	Rotary bearing tooth root surface	Fill grease	1	0	0	0	0	0	0	0	0	0	0	0	0	0	0	0	0	Every 50 hours	45
8	Final drive reduction	Replace	2		0										0					Every 500 hours	46
9	Fan belt	Check and	1				0				0				0				0	Every 200 hours	46
10	Air filter element	Cleaning inspection	1				0				0				0				0	Every 200 hours	47
		Replace	1																	Every 100 hours or a	52
11	Rotating bearing	Fill grease	1				0				0				0				0	Every 200 hours	47
12	working equipment	Fill grease	10					0					0					0		Every 250 hours	50
13	Hydraulic oil return filter	Replace	1					0										0		Every 500 hours	49
14	Fuel filter element	Replace	1										0							Every 500 hours	50
15	Hydraulic oil	Replace	1																	Every 1000 hours	50
16	Hydraulic oil suction filter	Replace	1																	Every 1000 hours	50
17	Hydraulic pilot circuit filter	Cleaning	2																	Every 1000 hours	51
18	Oil for support wheels and front idler	Replace	8																	Every 2000 hours	52
19	Alternator, starter motor	an examination	-																	Every 2000 hours	52
20	Use of electrical wiring and fuses	an examination	-																	Every 1 year	52
21	Coolant	Replace	1																	Every 2 years	53

when hydraulic front-end working devices such as breakers are used.

*The replacement time when using hydraulic front-end working devices such as breakers is different from the above. Please replace according to the frequency of use of the hydraulic front-end working device according to the following table.

Use of hydraulic front-end devices	Hydraulic oil replacement time	Replacement time of oil return filter
Time ratio	Every 1000 hours	Every 500 hours (Every 250 hours for the first
Standard work	Every 800 hours	Every 200 hours
(Backhoe operation)	Every 400 hours	
Breaker usage ratio	Every 300 hours	Every 100 hours
20%	Every 200 hours	

add

* After replacing the filter, be sure to check the oil level

(3) Due to the operation of the machine, the oil will gradually be consumed and reduced. Consumption varies according to the content of the work and the engine. Before use, be sure to confirm whether the amount of oil is between the upper and lower limits of the oil standard, and then perform maintenance such as refueling. In order to avoid hazards such as shortening the life of the engine and burning or unloading, please use the oil specified by Qilu Industry and Trade and the authentic oil filter of Qilu Industry and Trade, and observe the specified replacement time.

(4) For regular maintenance and inspection of the engine, please follow the engine instruction manual.

Key structure lubrication schematic

Handling of hoses

Leaking lubricating oil or fuel can cause a fire.

Do not twist, bend or hit the hose.

Do not use twisted, bent or cracked pipes, metal pipes or hoses, otherwise they may burst.

Retighten the loose joint.

Be careful when handling high temperature and high pressure parts

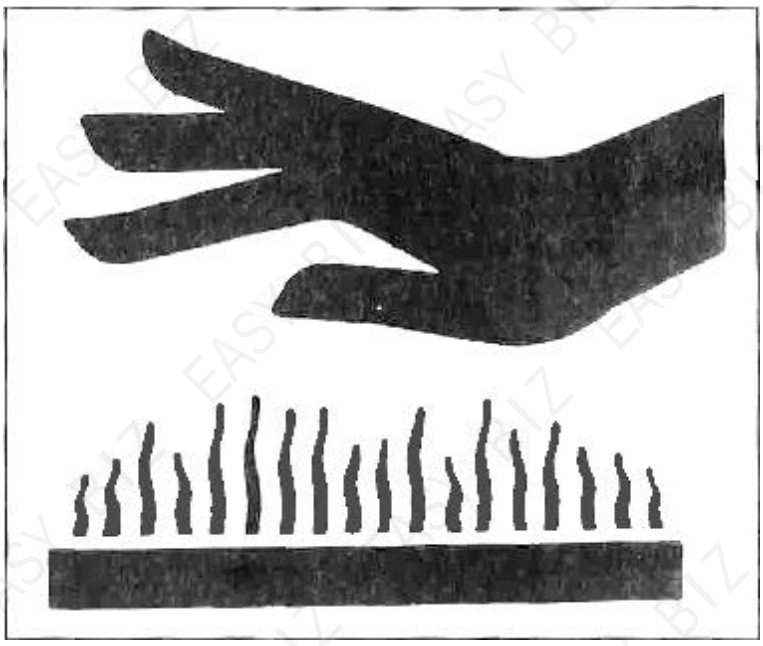

Please turn off the engine and wait for the machine to cool down before performing maintenance.

The engine, exhaust pipes, radiators, hydraulic pipes, sliding parts and many other parts of the machine are very hot when the engine has just turned off. Touching these parts can cause burns.

Engine coolant, hydraulic oil and other oils are also under high temperature and pressure.

Be careful not to touch the hydraulic oil when loosening the cover or plug. , In this case, operating the machine will cause burns or injuries due to hot oil spraying.

Be careful when operating the high temperature cooling system

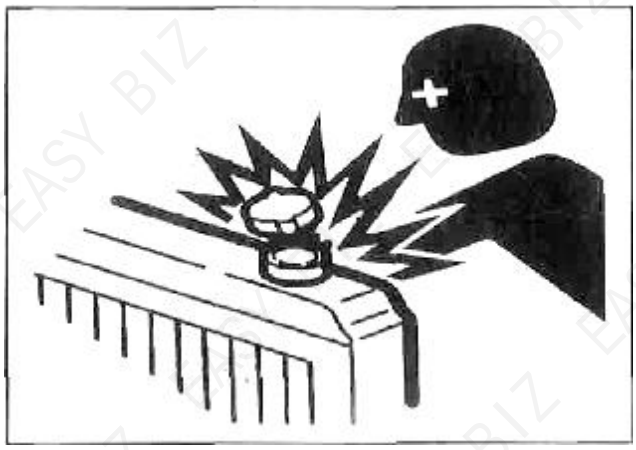

When the cooling water is hot, do not remove the radiator cap or drain plug. Turn off the engine,

Wait until the engine and cooling water cool down. Then slowly loosen the radiator cap to relieve the internal pressure, and then remove it.

Be careful of oil pressure

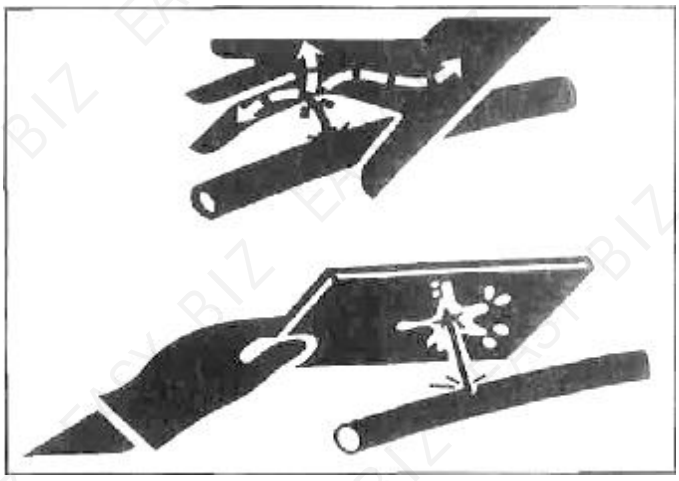

After the engine is turned off, the pressure in the hydraulic tubing will be maintained for a long time.

The internal pressure should be completely vented before maintenance work.

The high pressure of hydraulic oil can pierce the skin or eyes, causing serious injuries, blindness and even death. Remember that the hydraulic oil leaking from the small hole is almost invisible to the naked eye. When checking for leaks, wear goggles and thick gloves, and use cardboard or plywood to protect your skin to prevent damage from the hydraulic oil

spray.

If hydraulic oil invades the skin, it must be removed surgically by a doctor familiar with such injuries within a few hours.

Before working on the hydraulic system, release the pressure

Before the hydraulic system is depressurized, if the cover or filter is removed or the pipe is disconnected, hydraulic oil may spray out.

Loosen the vent plug slowly to relieve the pressure in the fuel tank.

When removing a plug or screw or disconnecting a hose, stand on one side and loosen it slowly to gradually release the internal pressure before removing it.

The oil or oil plug may be sprayed out due to the pressure in the oil tank of the traveling motor. Please loosen the oil plug slowly to release the internal pressure.

Be careful of flying debris when using a hammer

When using a hammer, pins or metal chips may splash around. This may cause serious injury.

When hitting hard metal parts such as pins, bucket teeth, side teeth or bearings with a hammer,

Please wear protective equipment such as goggles and gloves.

When hitting pins or bucket teeth, make sure that no one is around.

Beware of high-pressure grease

In the track tensioning device, grease such as under high pressure. When adjusting the tension force, if the procedure specified below is not followed, the grease relief valve may fly out and cause injury.

Never loosen the butter fitting.

Slowly loosen the butter pressure relief valve. Do not turn it more than one revolution.

Do not put your face, arms, legs or body in front of the butter pressure relief valve.

When the grease relief valve is loosened, if no grease flows out, the valve is malfunctioning. Please contact Shandong Qilu Industrial Co.,Ltd and Trade Service Agent for repairs.

Do not disassemble the track tensioner

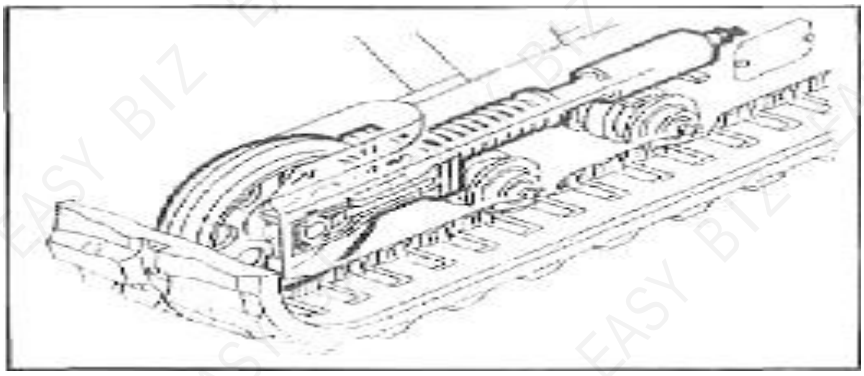

The track tensioner is equipped with a powerful spring. When the track tensioner is accidentally disassembled, the spring will pop out, causing serious injury. Do not disassemble the track tensioner.

Disconnect the battery cable

Please disconnect the battery cable before performing electronic system work or electric welding. Disconnect the negative (-) battery cable first. When reconnecting, connect the negative (-) battery cable last.

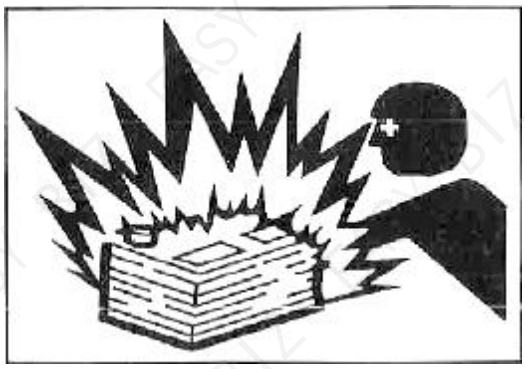

Be careful when handling the battery

The battery contains sulfuric acid, which can damage the eyes or skin if touched accidentally.

If it gets into eyes accidentally, rinse immediately with clean water and seek medical attention immediately.

If swallowed accidentally, drink plenty of water or milk and seek medical attention immediately.

If the sulfuric acid touches the skin or clothes, wash it off immediately with plenty of water.

Wear goggles and gloves when handling the battery.

The battery can generate flammable hydrogen gas, which may cause an explosion. Keep away from fire sources such as open flames, sparks or lighted cigarettes.

When checking the electrolyte level, use a flashlight.

Before checking or disposing of the battery, make sure to turn off the start switch to stop the engine.

Be careful not to let metal tools or any metal objects touch the electrodes and cause a short circuit.

An electric spark will be generated when the electrode is loose. Be sure to tighten it.

Make sure that the battery cap is securely closed.

When the battery is frozen, do not charge or start the engine across, otherwise it may explode. Heat the frozen battery to 15°C before use.

Do not use the battery when the liquid level is below the lower limit. Otherwise, it will accelerate the internal aging of the battery and shorten the battery life. It can also cause rupture (explosion).

Do not add distilled water above the upper limit. Otherwise, the electrolyte will leak out. Contact with the liquid can damage the skin or corrode machine parts.

Clean the area around the electrolyte level line with a damp cloth and check the level. Do not clean with a dry cloth, otherwise it may cause static electricity to accumulate, burn or explode.

Use battery charging cable to jump start

When using the battery charging cable to start the engine, be sure to connect the cable according to the correct steps below. Incorrect cable connection can cause discharge and battery explosion.

Don't let the "problem machine" and the "rescue machine" touch each other.

Do not touch the positive (+) and negative (-) clamps of the battery charging cable or touch the machine.

When connecting, first connect the positive pole of the battery charging cable to the positive (+) terminal. When disconnecting, first disconnect the negative cable from the negative (-) terminal (grounding terminal).

Be sure to connect the cord clamp securely.

Connect the last clip of the battery charging cable to a place as far away from the battery as possible.

When using the battery charging cable to start the engine, you should always wear goggles and gloves.

Use battery charging cables and clamps that are sized for the battery capacity. Do not use damaged or corroded battery charging cables and clamps.

Make sure that the battery of the "rescue machine" has the same capacity as the battery of the "problem machine".

Please entrust Shandong Qilu Industrial Co., Ltd Service Agent for welding repair

When welding operations must be carried out, they must be carried out by qualified personnel in a well-equipped workplace. In order to prevent damage to any part of the machine due to excessive current or electric sparks, please observe the following matters.

Disconnect the battery wiring before welding.

Do not continuously apply a voltage of 200V or more.

The grounding point must be connected within 1 meter from the welding part. Do not connect the ground terminal near the electrical control device/instrument or connector.

Ensure that there is no seal or bearing between the welding part and the ground terminal.

Do not connect the ground terminal around the pin or hydraulic cylinder of the working device.

When welding the machine body, disconnect the connector of the electric control device before the operation.

Vibration experienced by the operator

The test results of the vibration transmitted by the machine to the operator show that the operator's upper limb vibration is less than 2.5m/s2, while in the seat part, the body vibration is less than 0.5m/s2.

Waste disposal

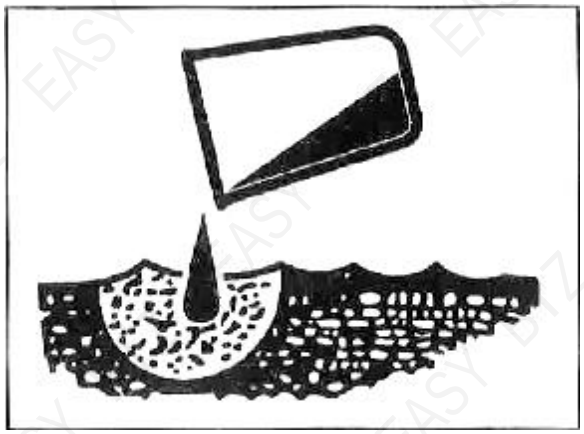

Be sure to collect the waste oil discharged from the machine in a container. Improper disposal of waste oil can cause harm to the environment.

When handling hazardous materials such as lubricating oil, fuel, coolant, solvents, filters, and batteries, please follow applicable laws and regulations.

Disposal of hazardous chemicals

Direct contact with hazardous chemicals can cause serious injuries.

Hazardous chemicals used in this machine include grease, battery electrolyte, coolant, paint and adhesives.

Please handle hazardous chemicals carefully and properly.
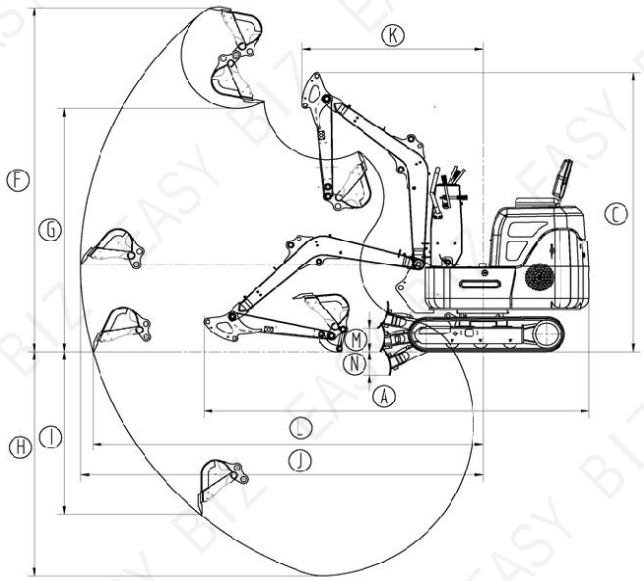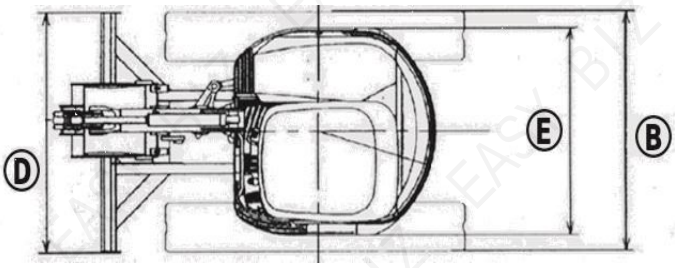
Overall size	Unit	Standard
Total length (during transportation) A	mm	2600
Total width (transport/operation) B	mm	860
Total height (during transportation) C	mm	1480
Width of bulldozer (shrink/stretch) D	mm	860
Height of bulldozer	mm	210
Track center distance E	mm	680
Standard track plate width	mm	180
Platform ground clearance	mm	370
Standard bucket wide (with/without edge teeth)	mm	360(310)
Track length	mm	1200
Wheel spacing	mm	670
working range	Unit	Standard
Max. Digging Height F	mm	2580
Max. Dumping Height G	mm	1830
Max. Digging Depth H	mm	2000
Maximum depth of vertical arm excavation I	mm	1600
Max.Digging distance J	mm	2850
Mini. Turning radius of front end K	mm	1290
Max.Digging distance on the ground L	mm	2700
Max.Bulldozing height M	mm	260
Max.Bulldozing depth N	mm	190